CaDA®
CLAAS

XERION
CLAAS

CLAAS
CLAAS

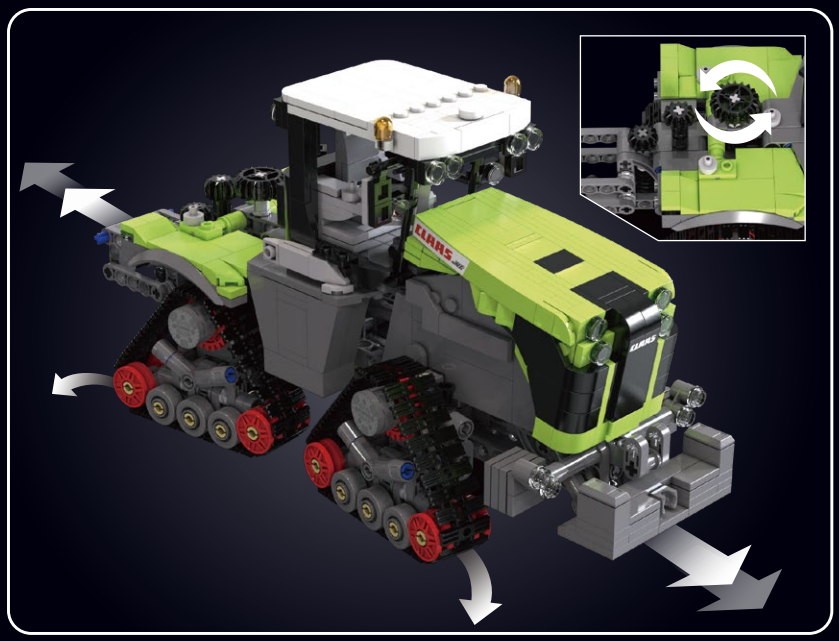

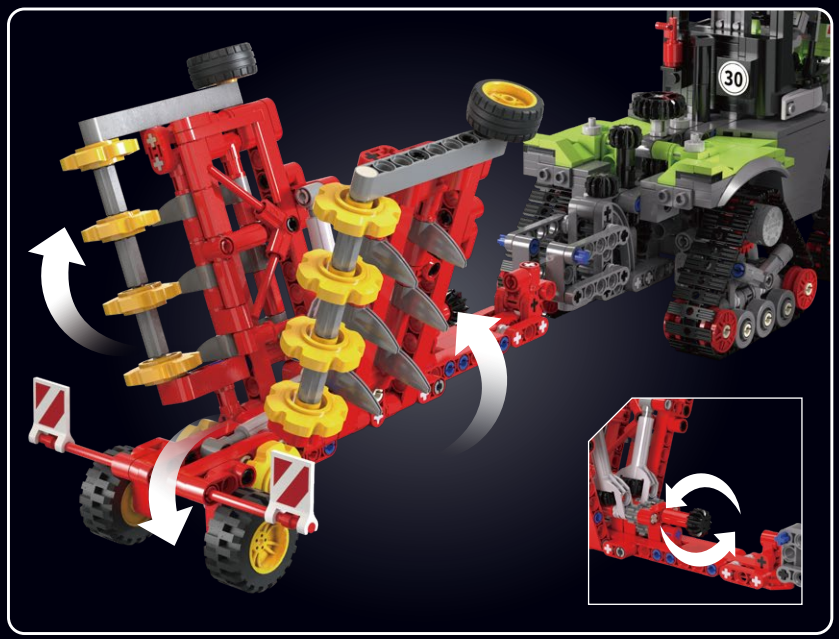
30

30

XERION 5000 TRAC TS

The crawler track system from Dutch manufacturer Zuidberg is fitted with CAMSO tracks with a track width of 30”/762 mm. This increases the machine’s footprint by 25% compared with the largest single tyre. The tracks are designed to deliver reliable tractive power and minimize ground pressure in almost all conditions. Equipped with a pendular suspension system, the crawler tracks adapt perfectly to the terrain and ensure a high level of driver comfort when combined with the cab suspension.

The XERION TRAC TS has a tare weight of 24 t. The gross vehicle weight permitted on the road is max 30 t. In addition, all versions of the machine have an external width of less than 3.00 m.

CLAAS

About CLAAS

CLAAS is a family business founded in 1913 and is one of the world's leading manufacturers of agricultural engineering equipment. The company, with corporate headquarters in Harsewinkel, Westphalia, is the European market leader in combine harvesters. CLAAS is the world leader in another large product group, self-propelled forage harvesters. CLAAS is also a top performer in world-wide agricultural engineering with tractors, agricultural balers and green harvesting machinery. The CLAAS product portfolio also includes state-of-the-art farming information technology. CLAAS employs more than 12,000 workers worldwide and reported a turnover of 4.9 billion euros in the 2022 financial year.

"CLAAS looks after its customers and never lets them down" this principle which guided August Claas still holds true today. But the small trade business he set up 100 years ago has since become a multinational company with locations and sales companies in over 100 countries. As has always been the case, CLAAS is a business with family participation, and with Cathrina Claas Mühlhäuser as chairwoman of the supervisory board and main shareholder and representatives from the two other owner families, it also remains family run.

Author

My name is Karol Czerwonka (aka "Bricksley"). In everyday life engineer, I am professionally associated with the construction machinery industry. The adventure with bricks began in my childhood and has been going on over 25 years. I'm interested in specialized machines and construction equipment. Recently, I have been focusing on detailed models in various scales that combine mechanisms of real machines with an accurate representation of their appearance. It is important to me to accurately transfer all details from real machines to models as well as possible.

Bricksley

Czerwonka Karol Bricksley

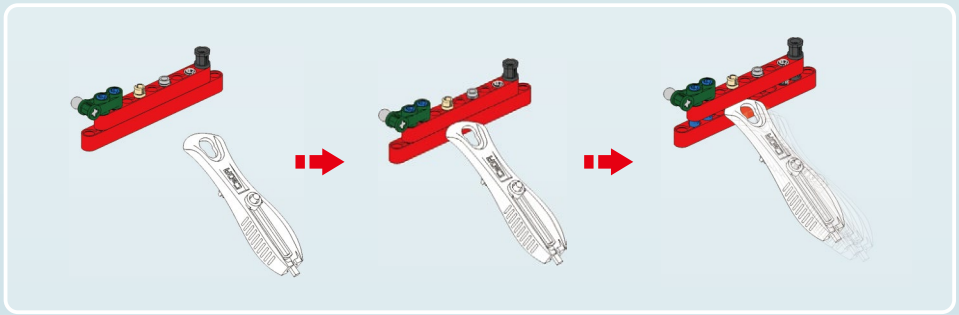

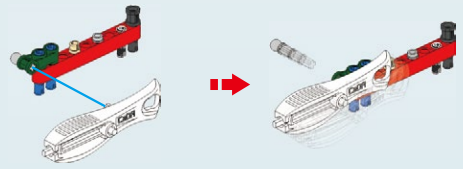

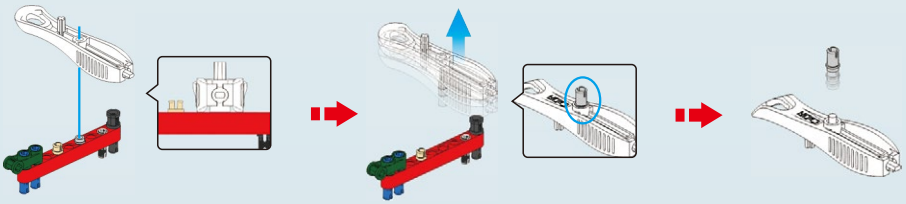

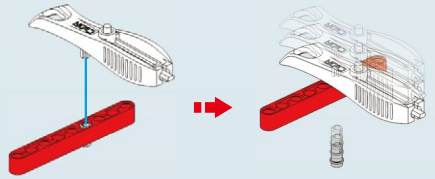

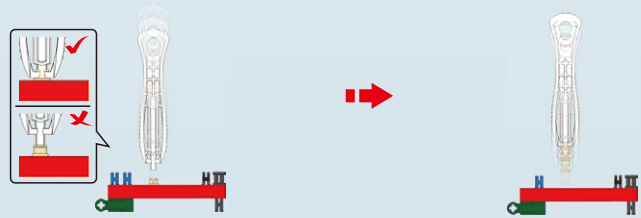

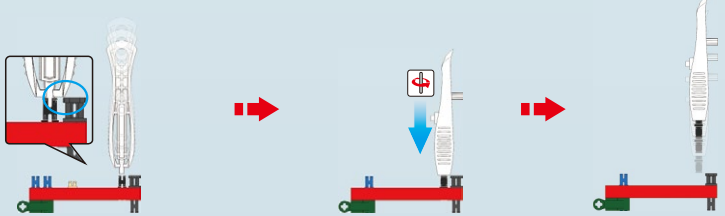

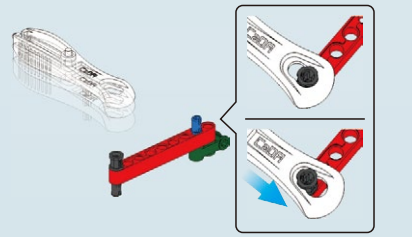

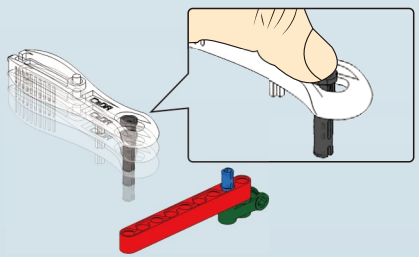

1

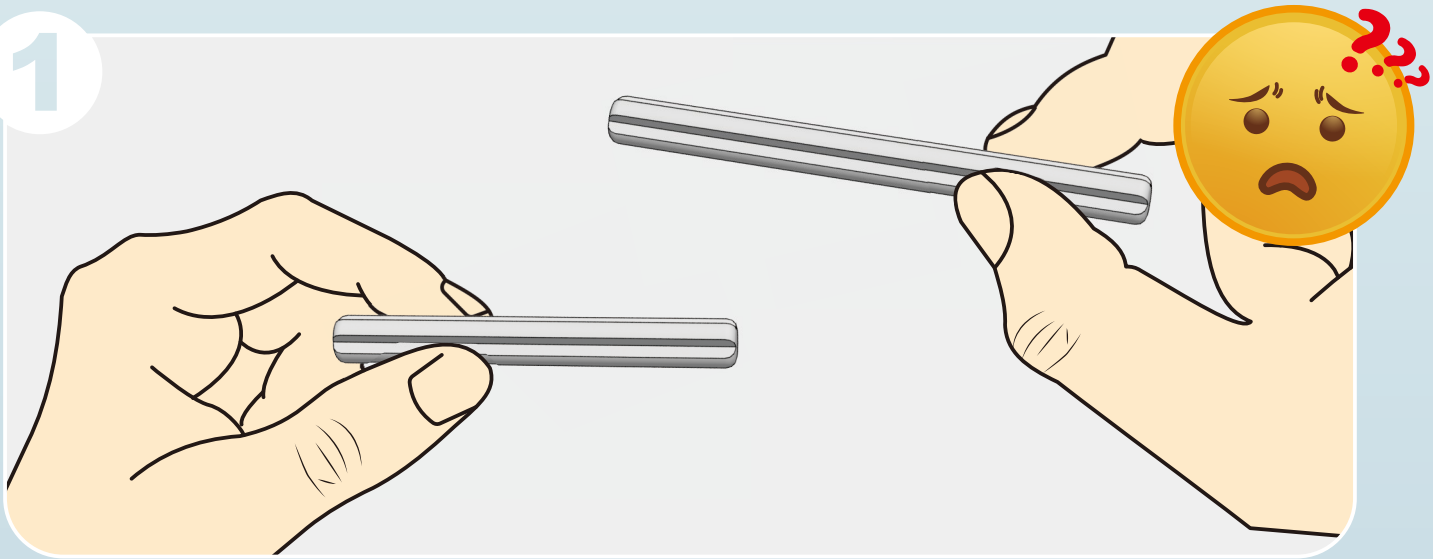

2

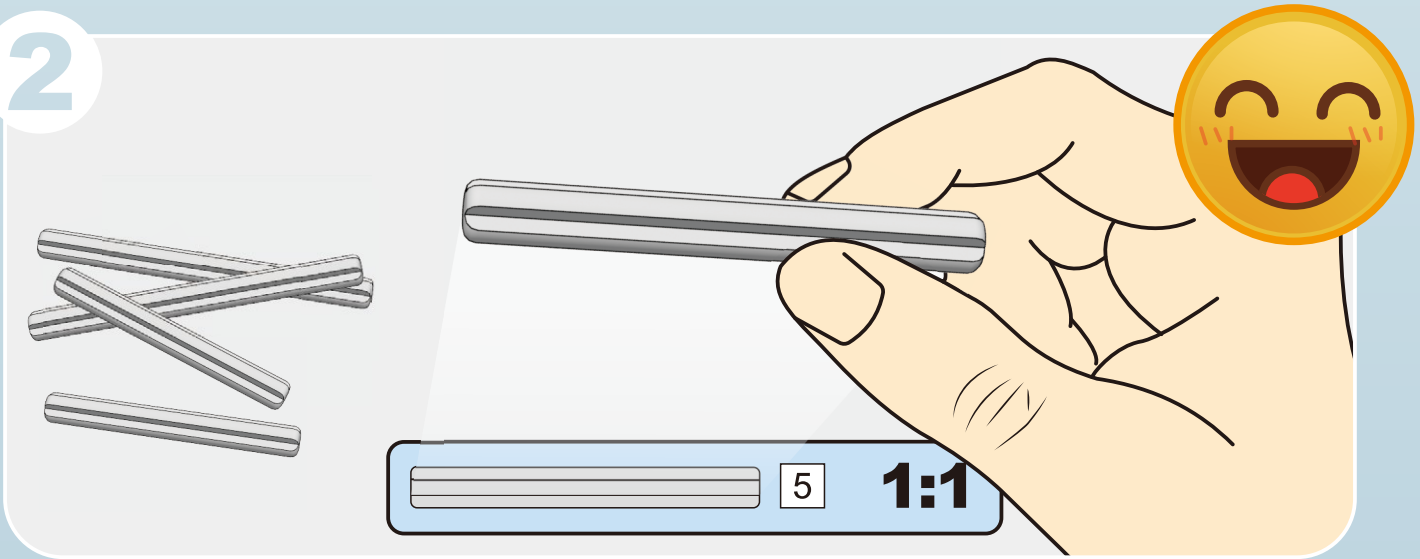

1

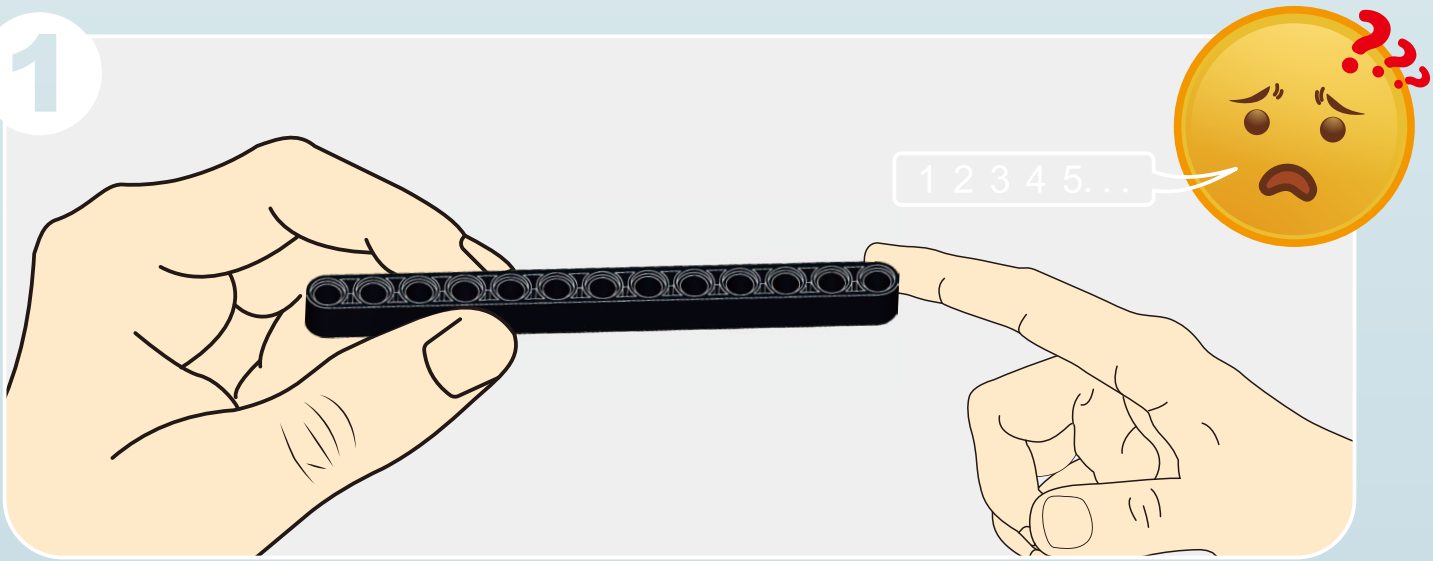

2

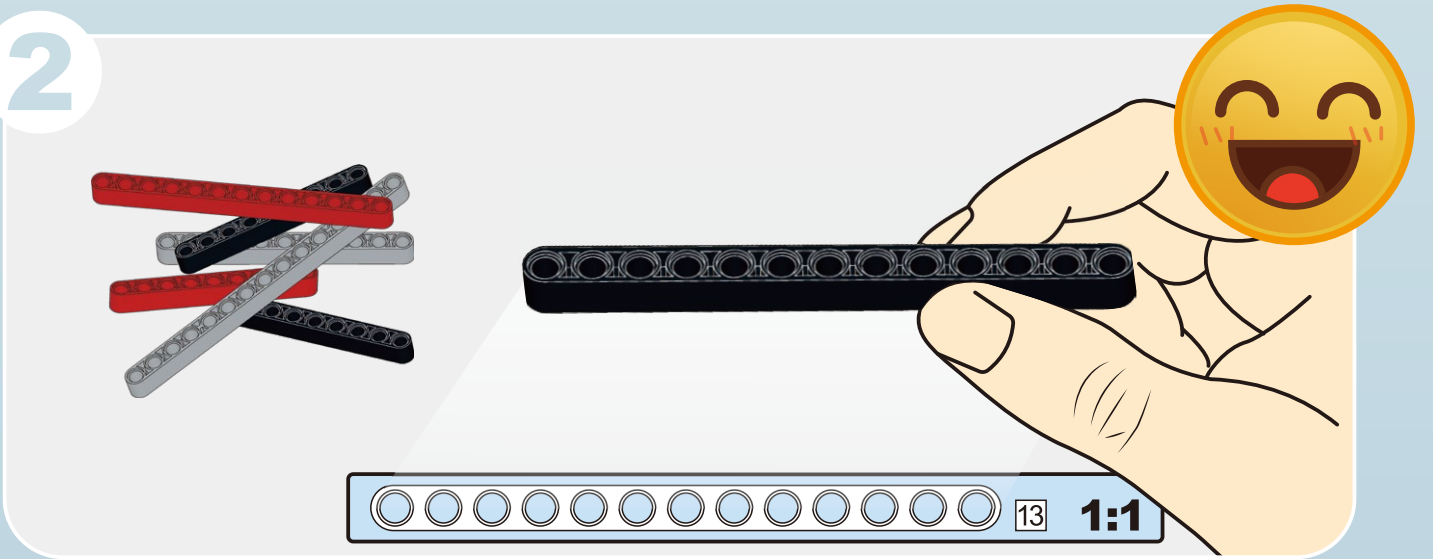

1 +

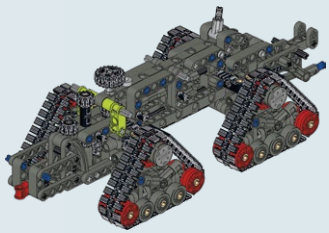

A

2 +

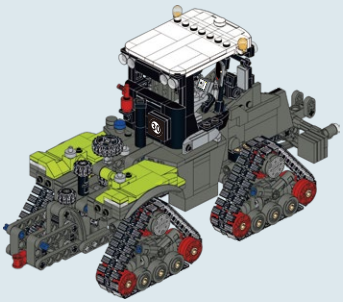

B

3 +

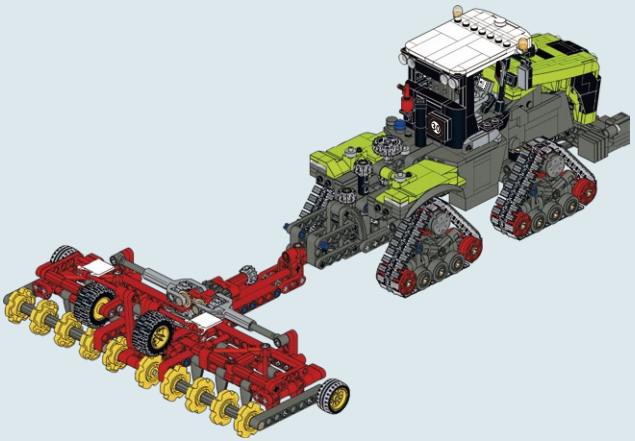

C

A

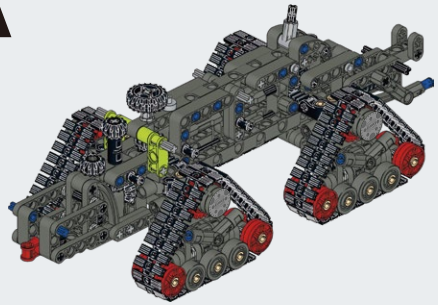

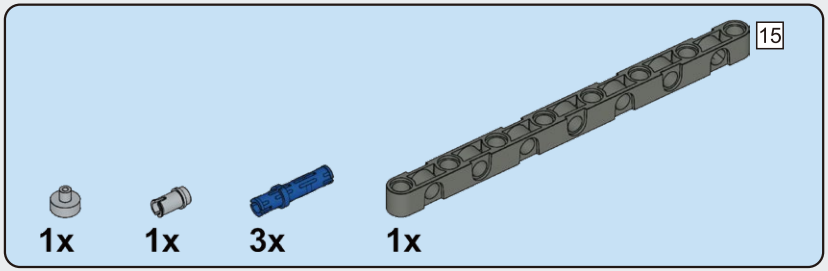

A1

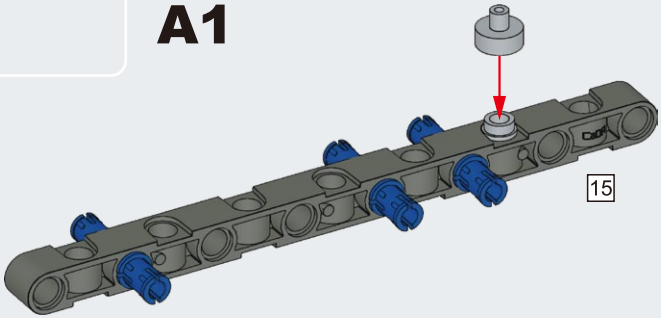

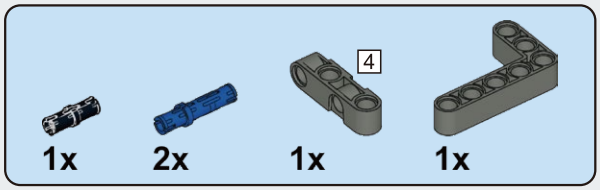

A2

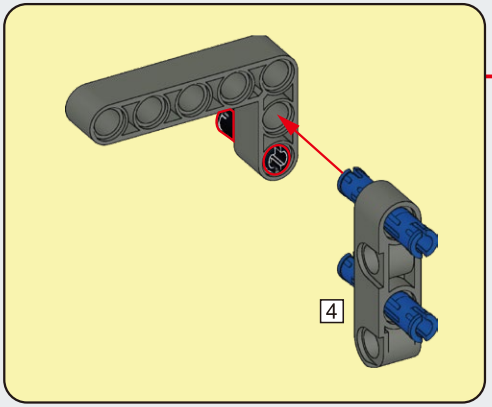

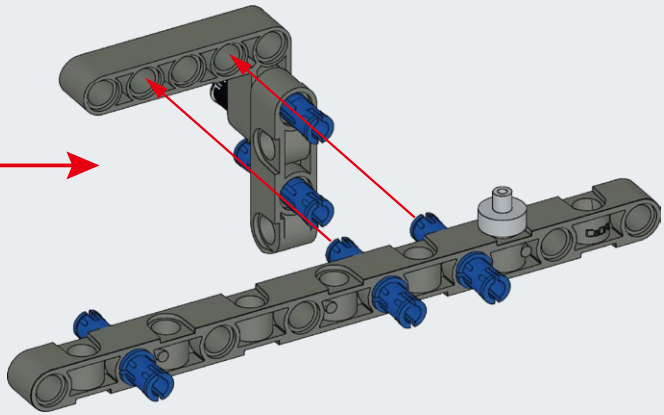

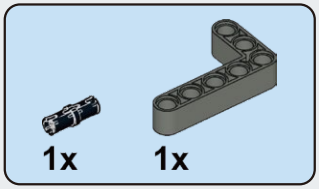

A3

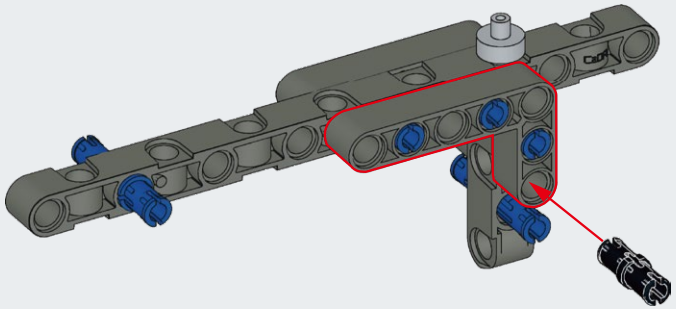

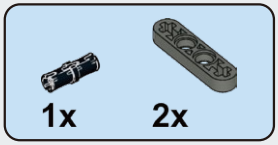

A4

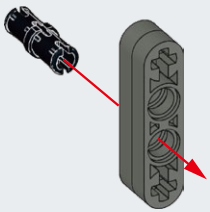

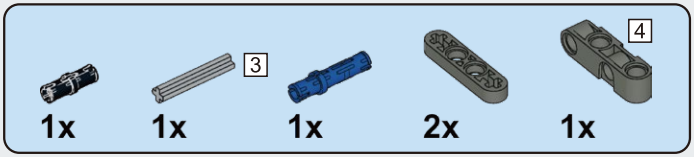

A5

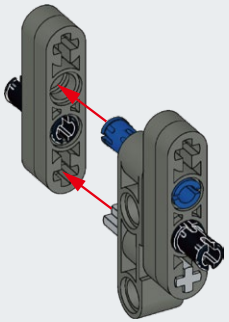

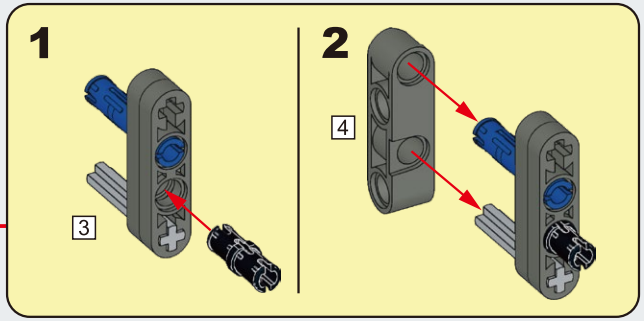

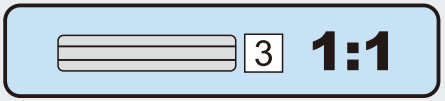

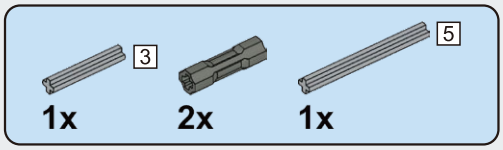

A6

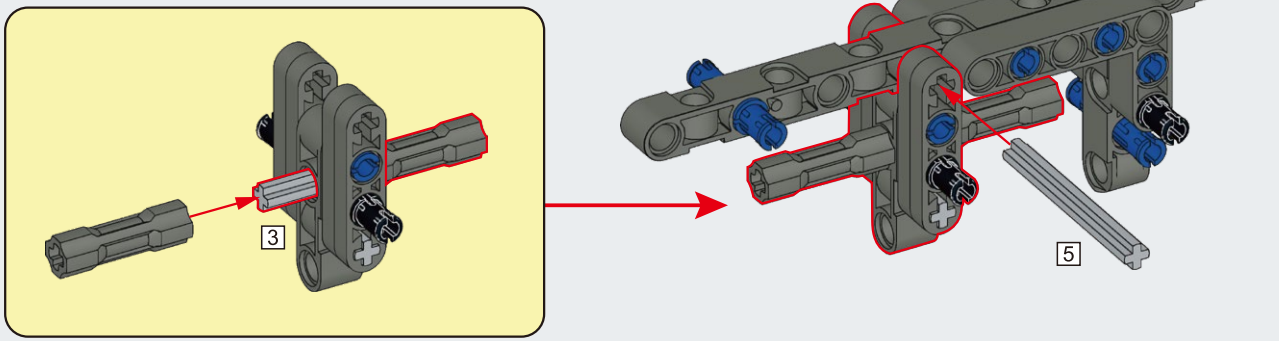

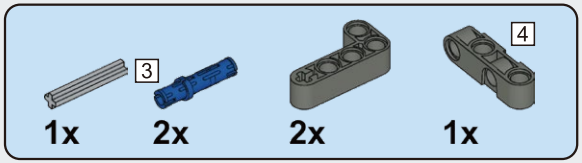

A7

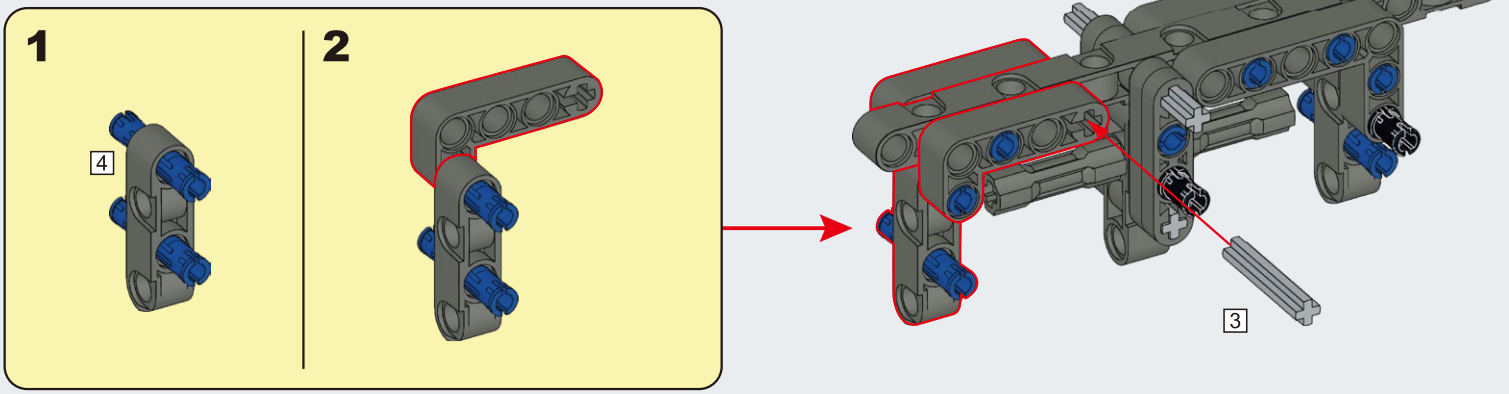

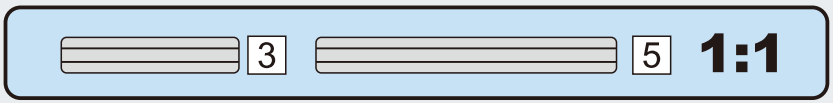

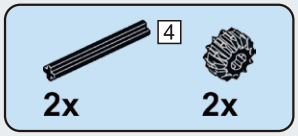

A8

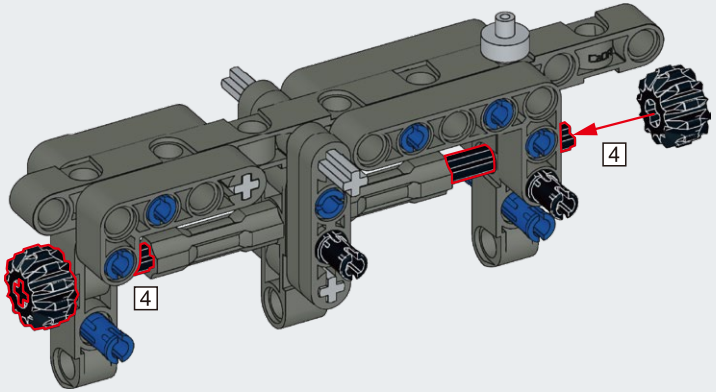

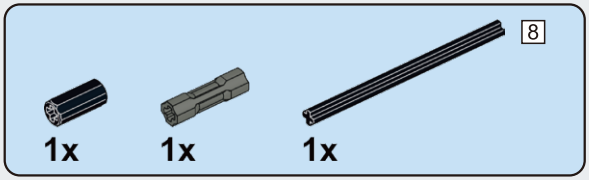

A9

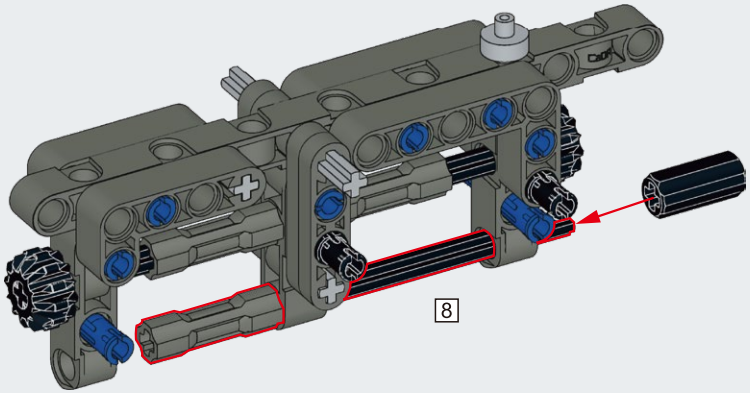

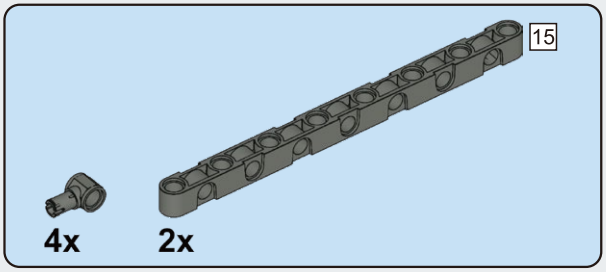

A10

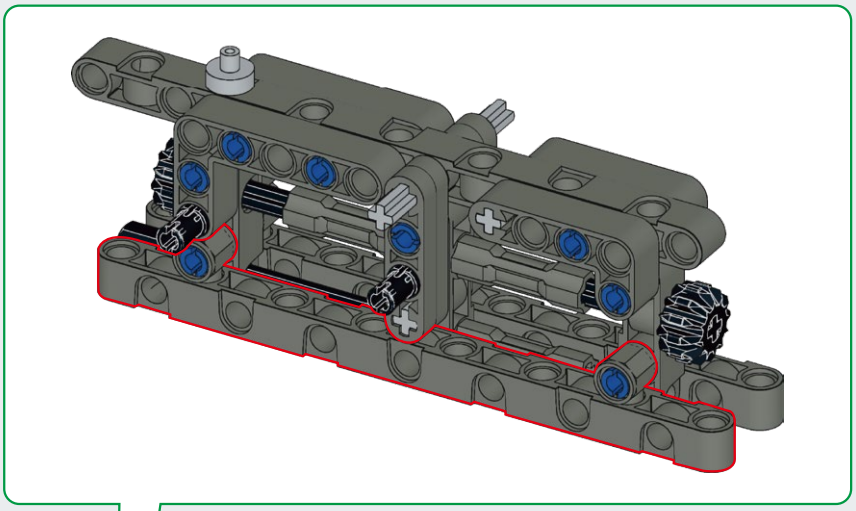

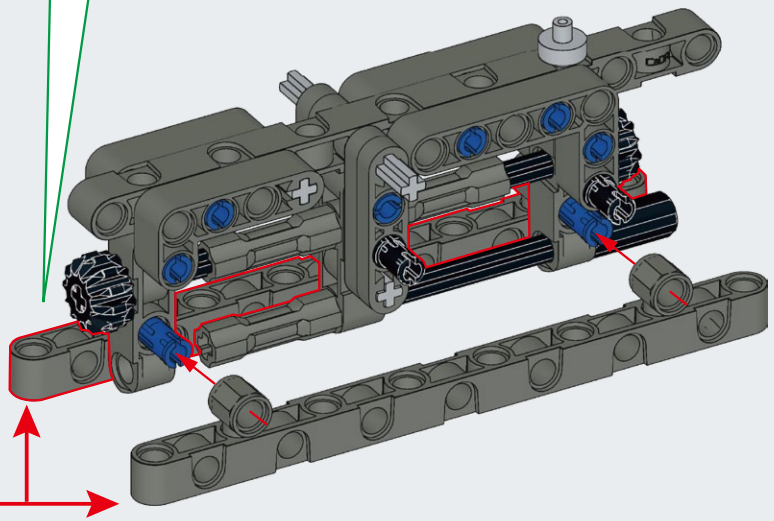

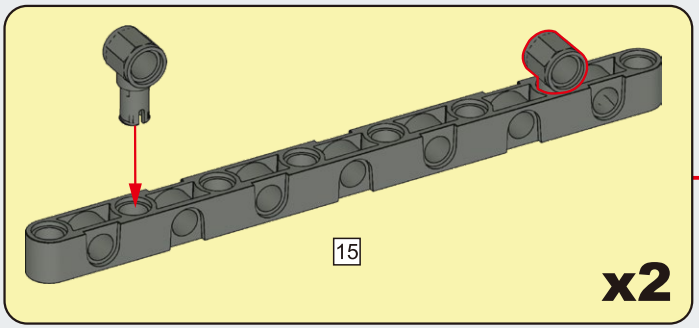

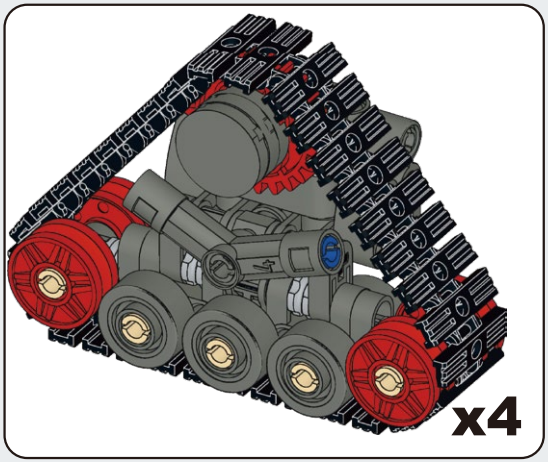

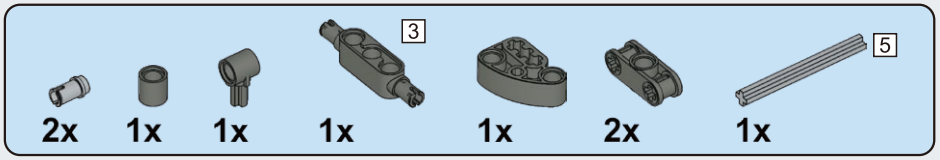

A11

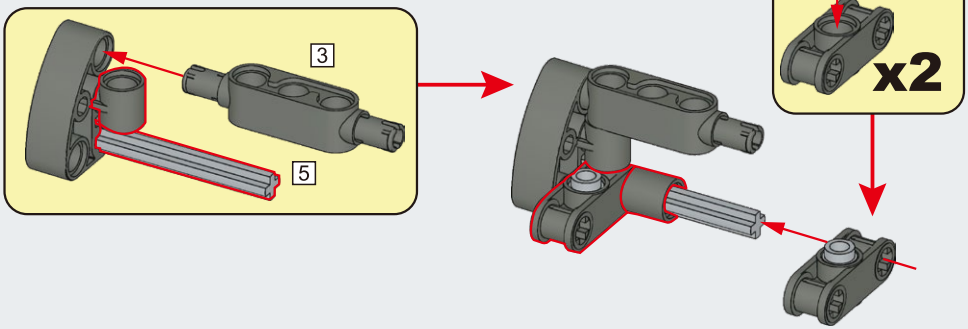

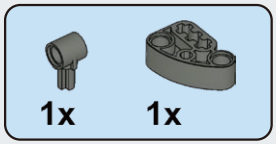

A12

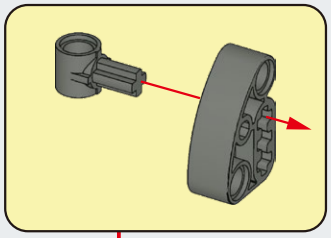

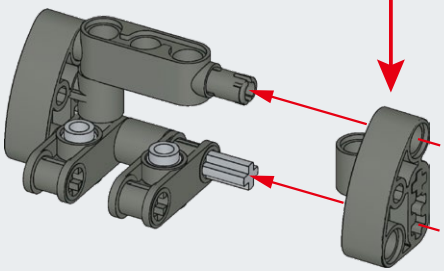

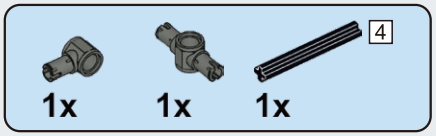

A13

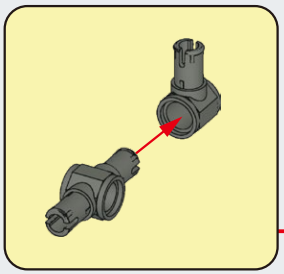

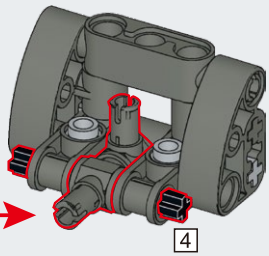

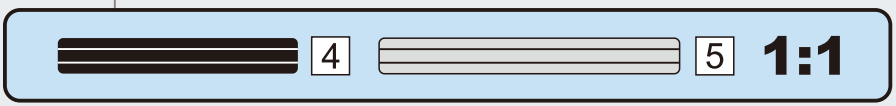

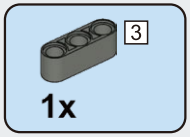

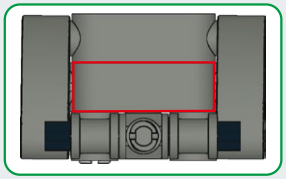

A14

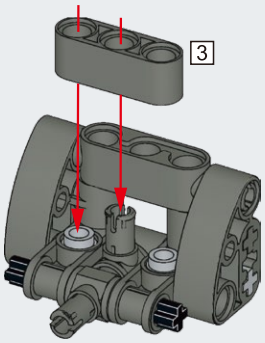

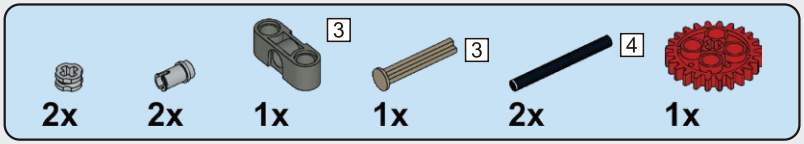

A15

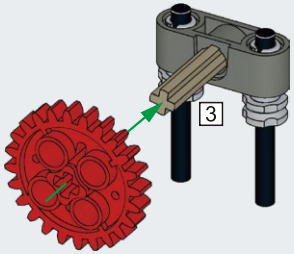

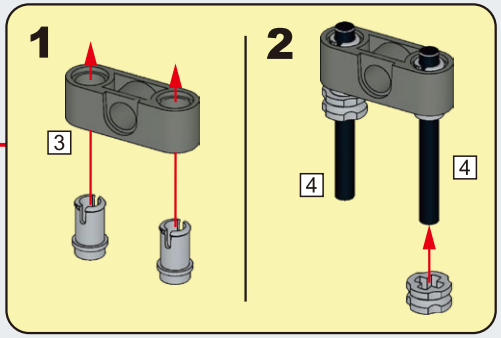

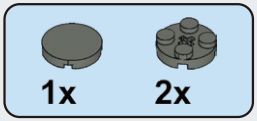

A16

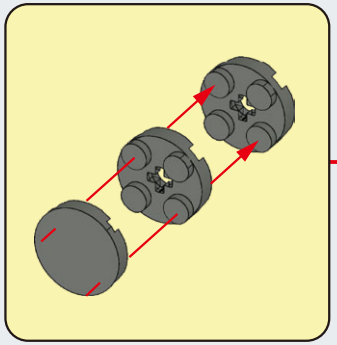

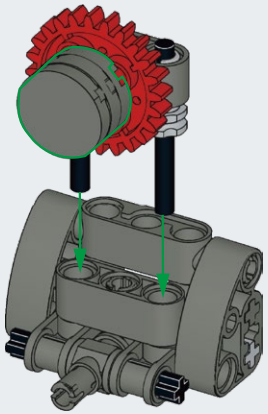

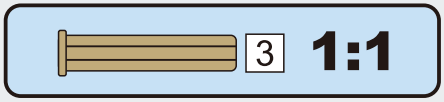

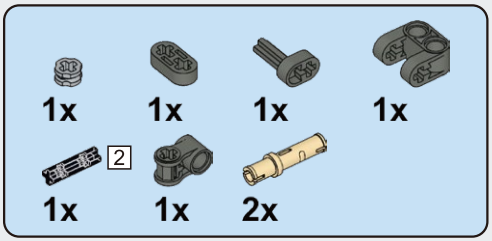

A17

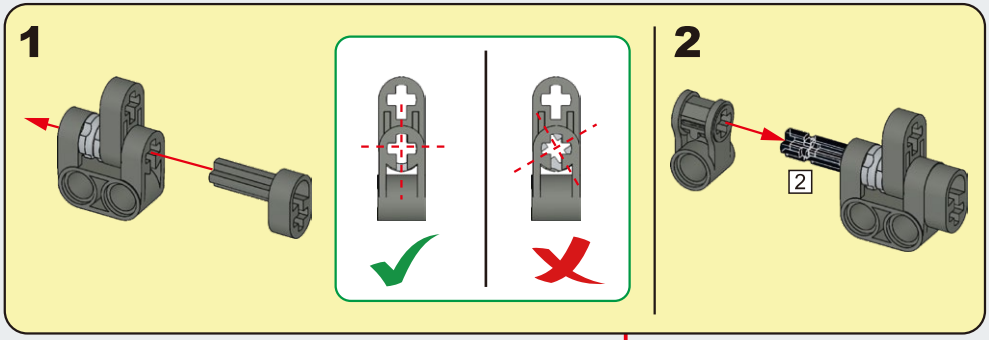

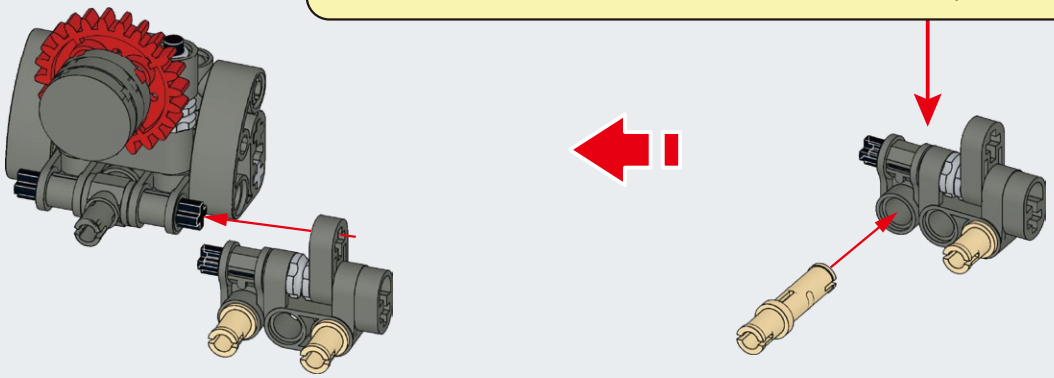

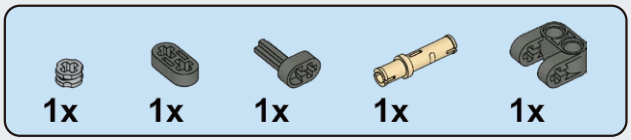

A18

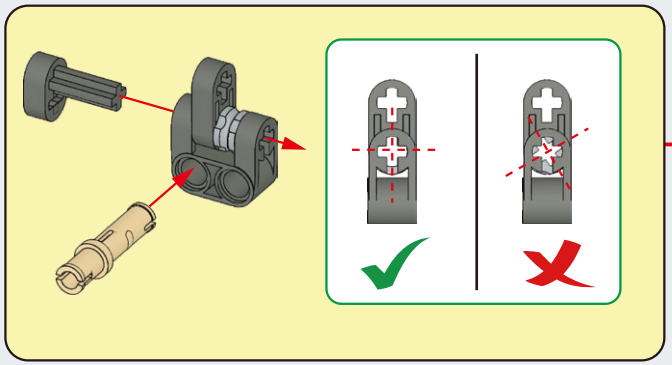

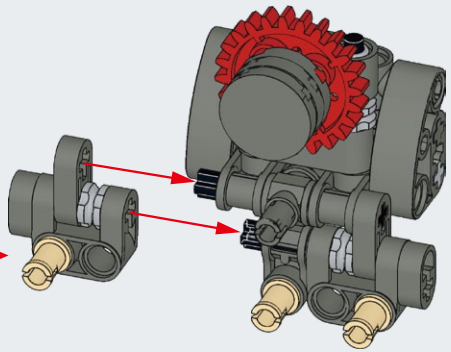

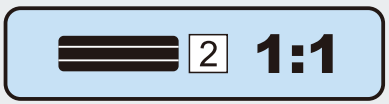

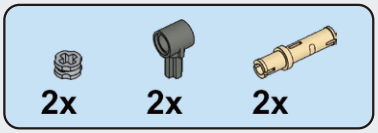

A19

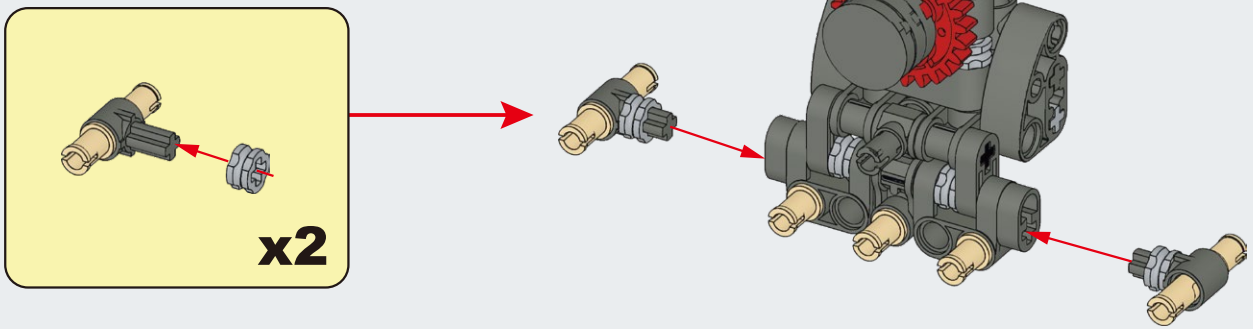

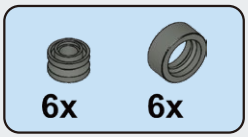

A20

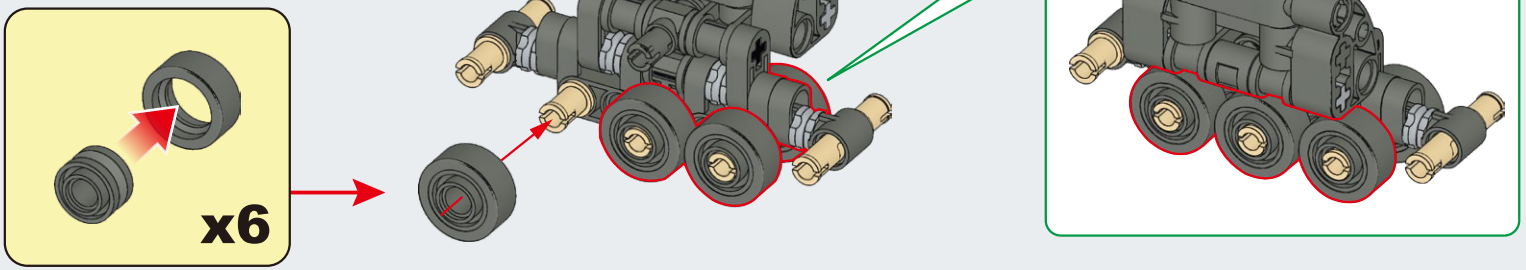

A21

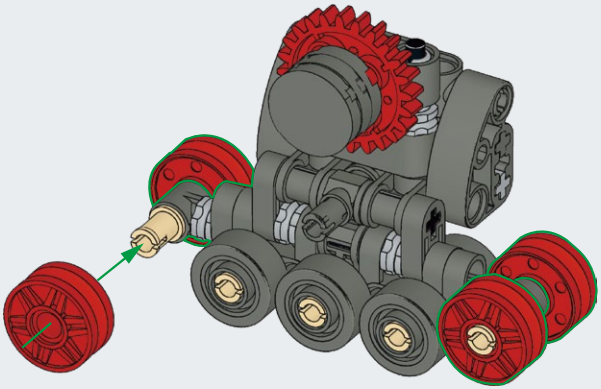

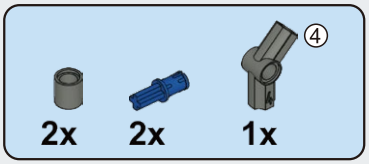

A22

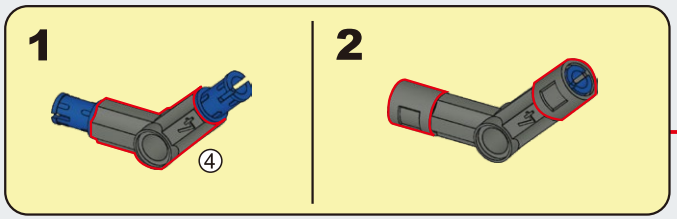

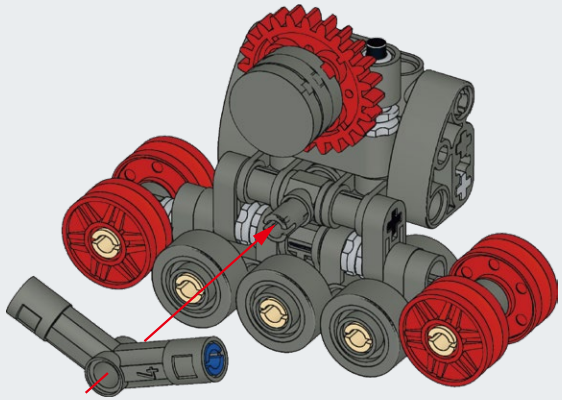

33x

A23

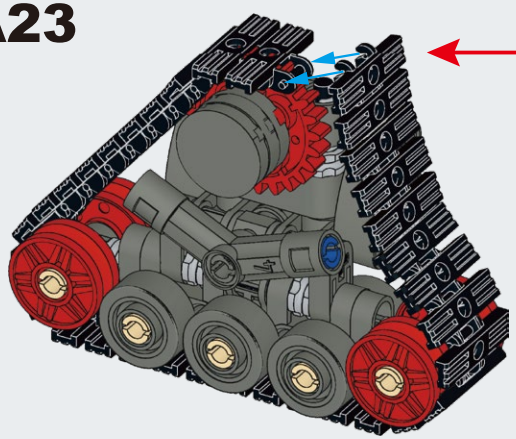

x33

10 — 13

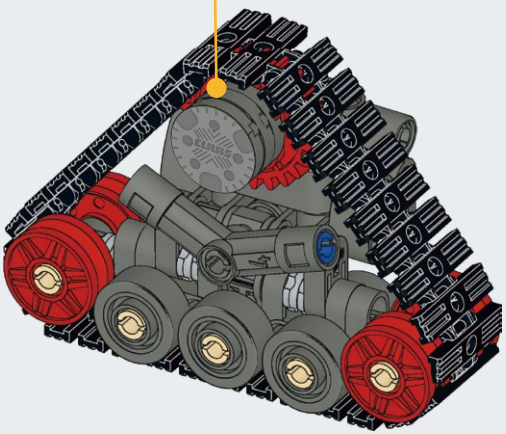

x4

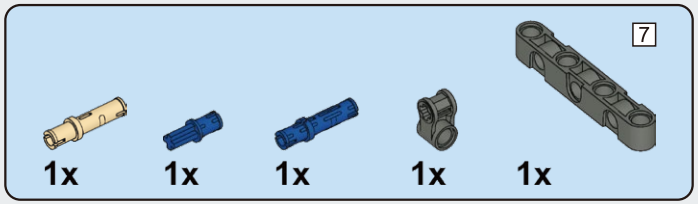

A24

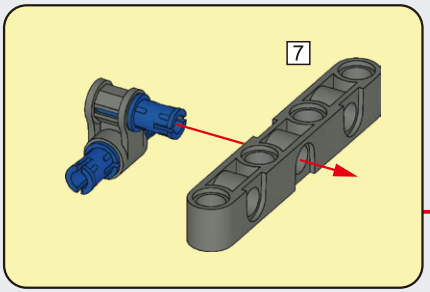

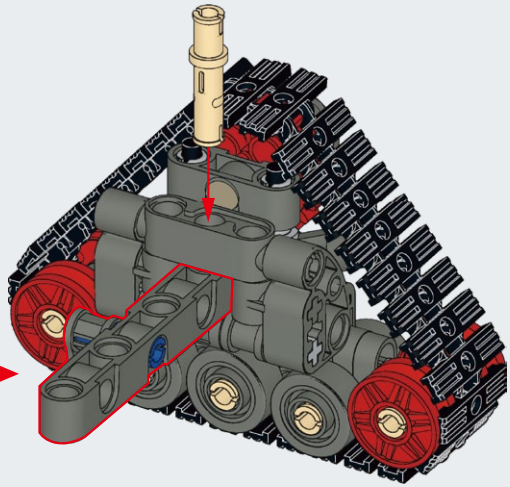

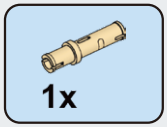

A25

A23

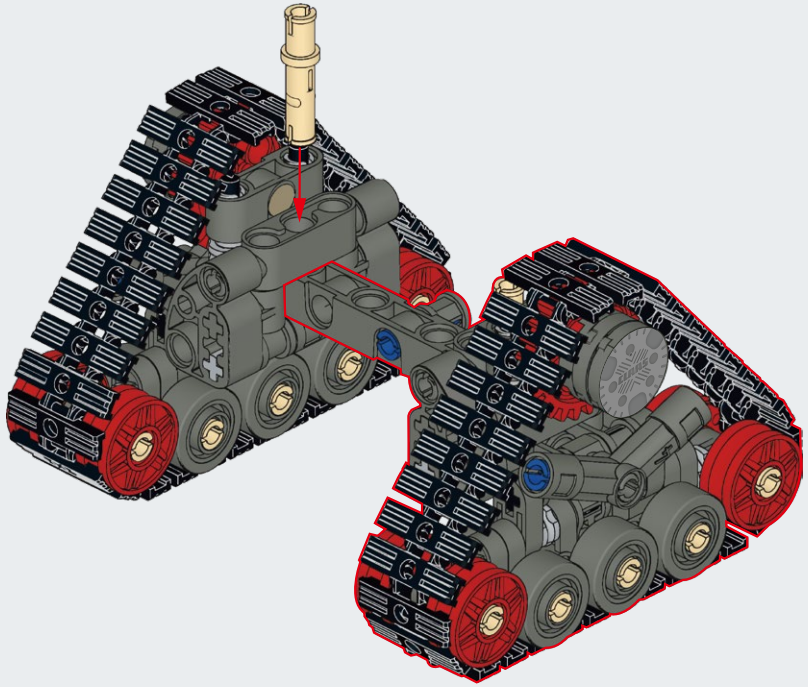

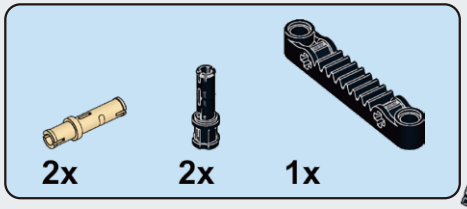

A26

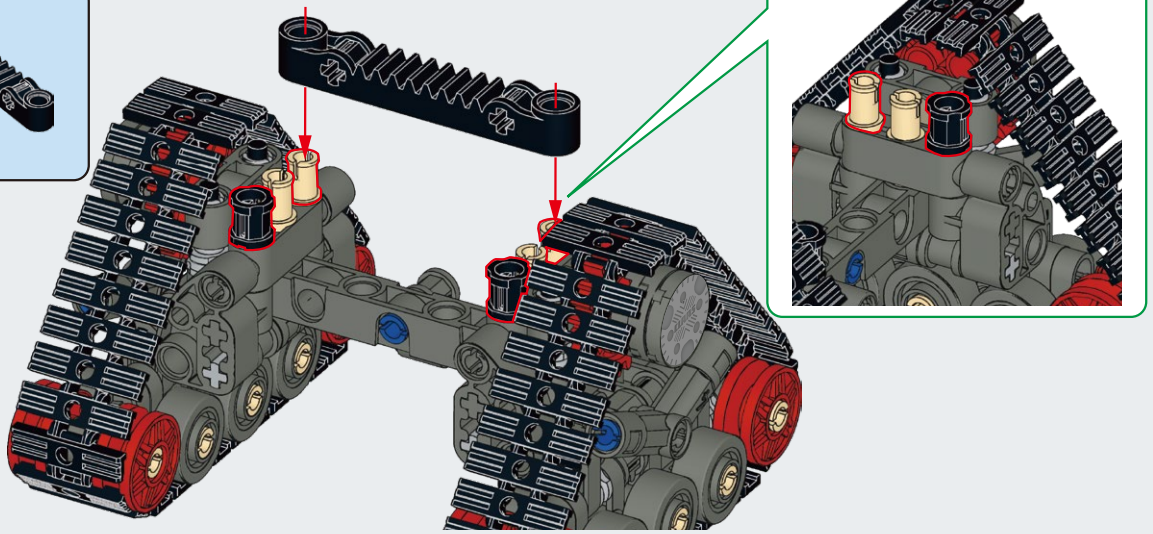

A27

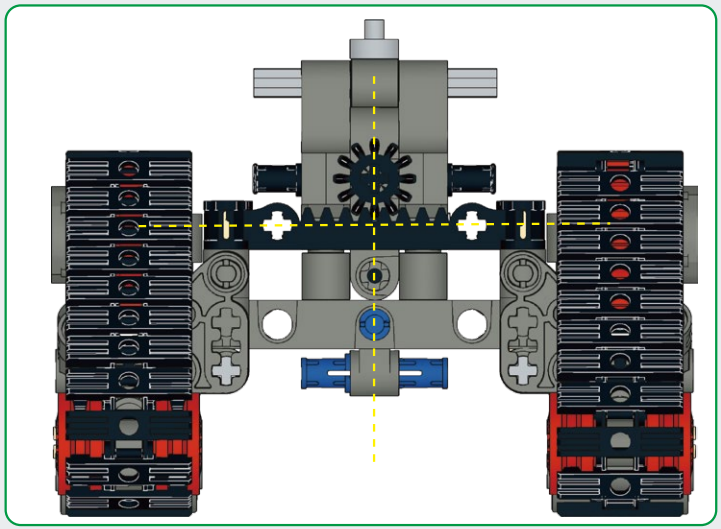

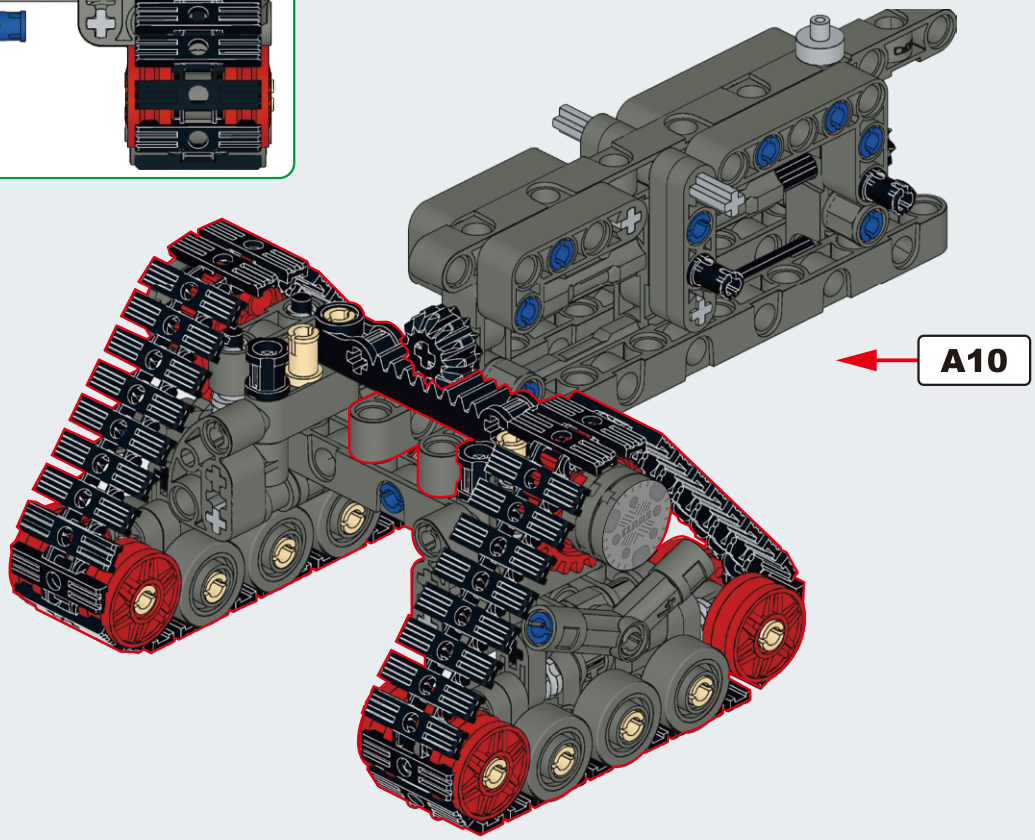

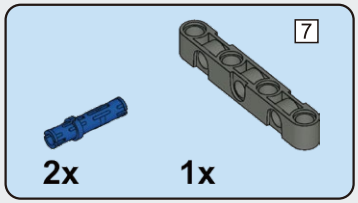

A28

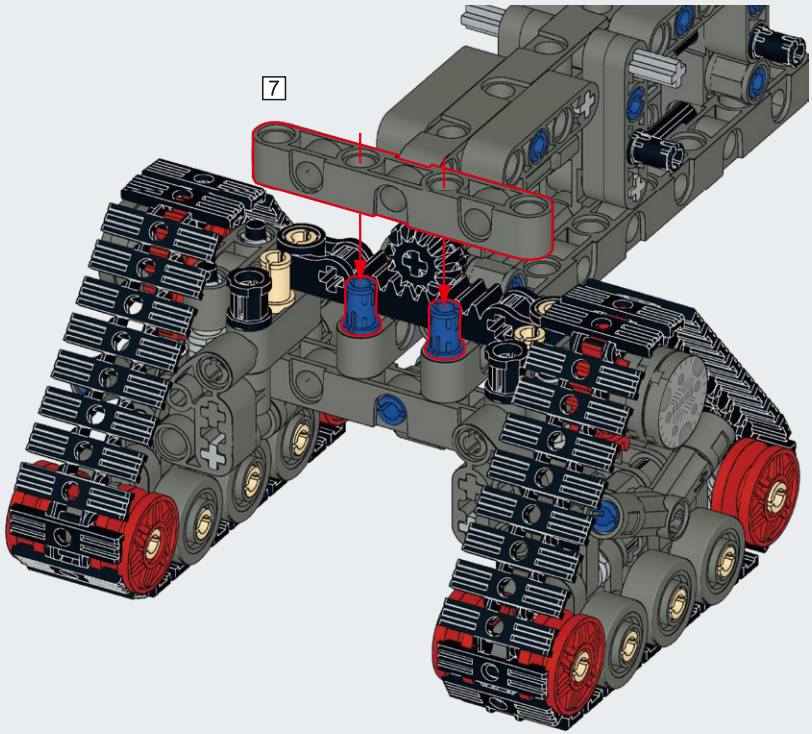

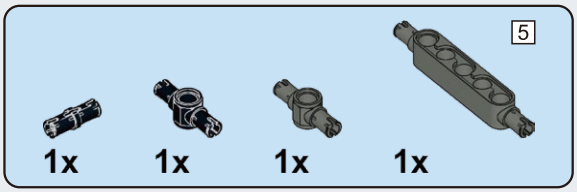

A29

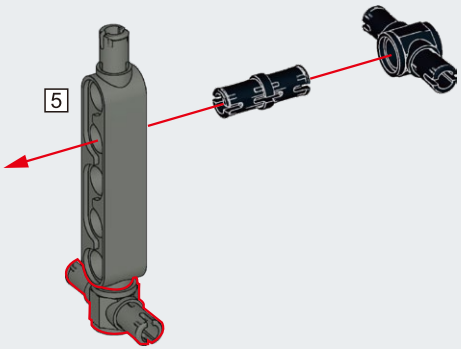

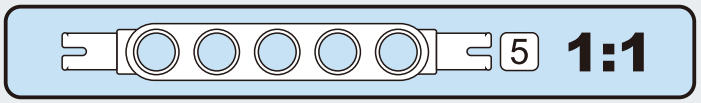

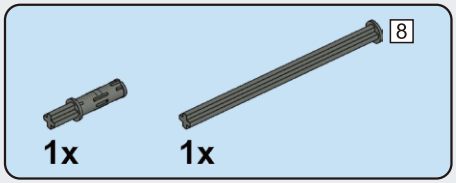

A30

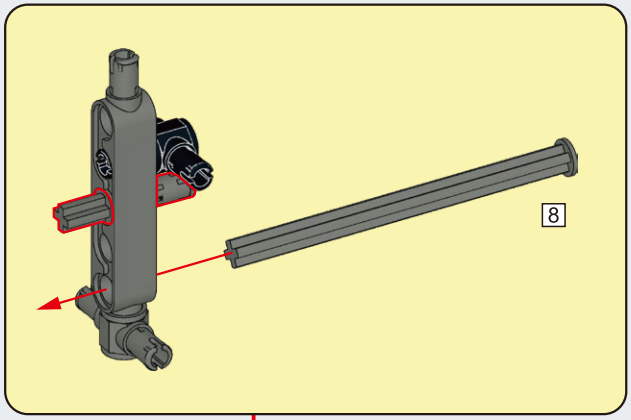

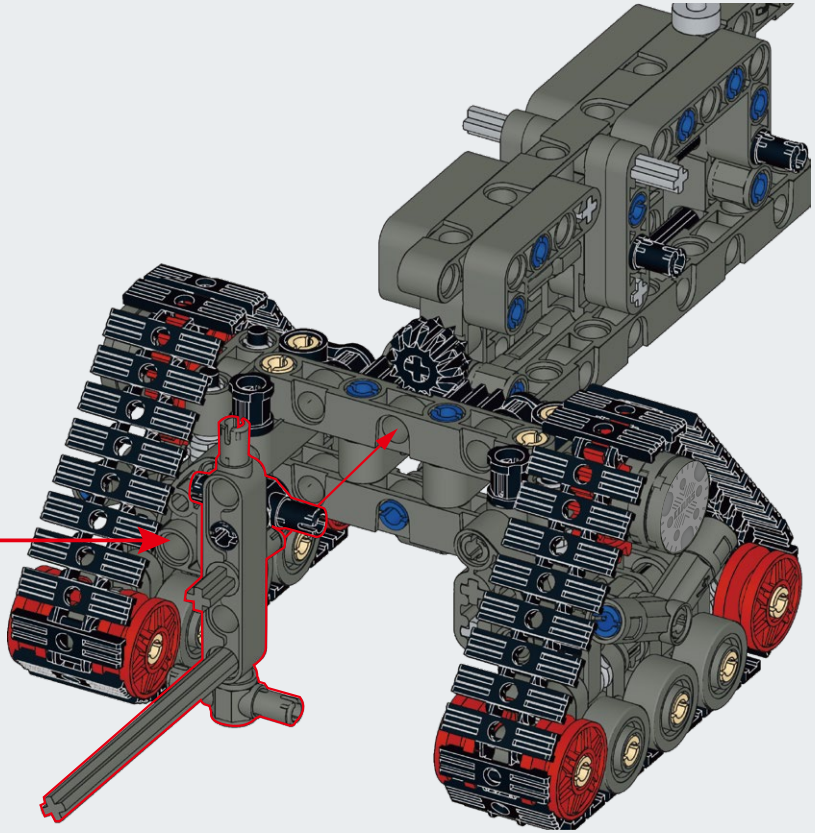

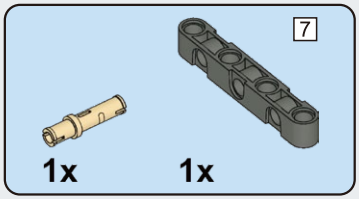

A31

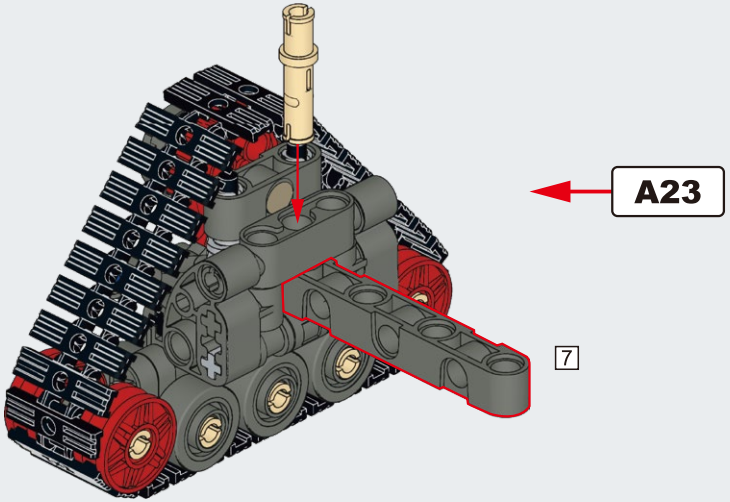

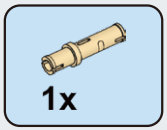

A32

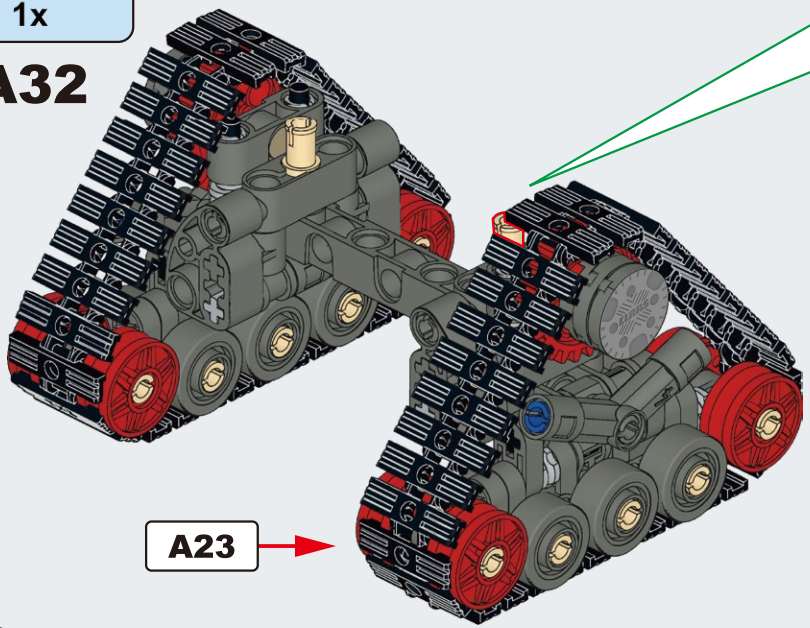

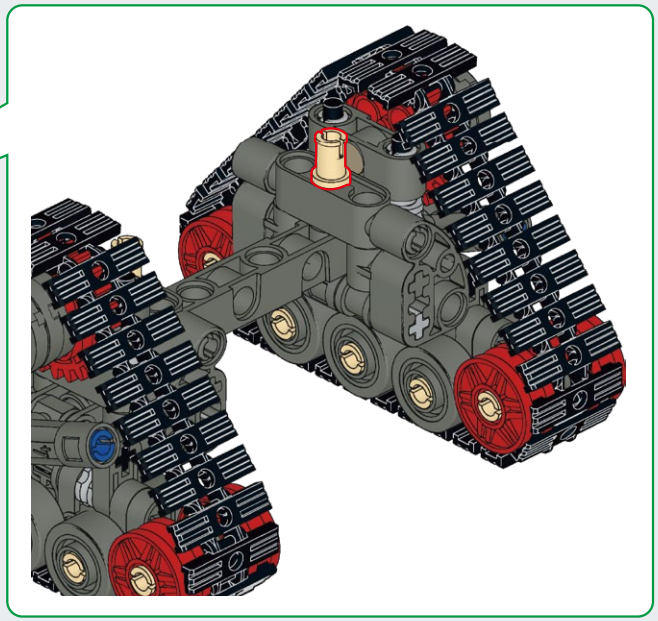

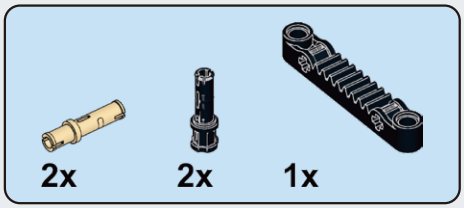

A33

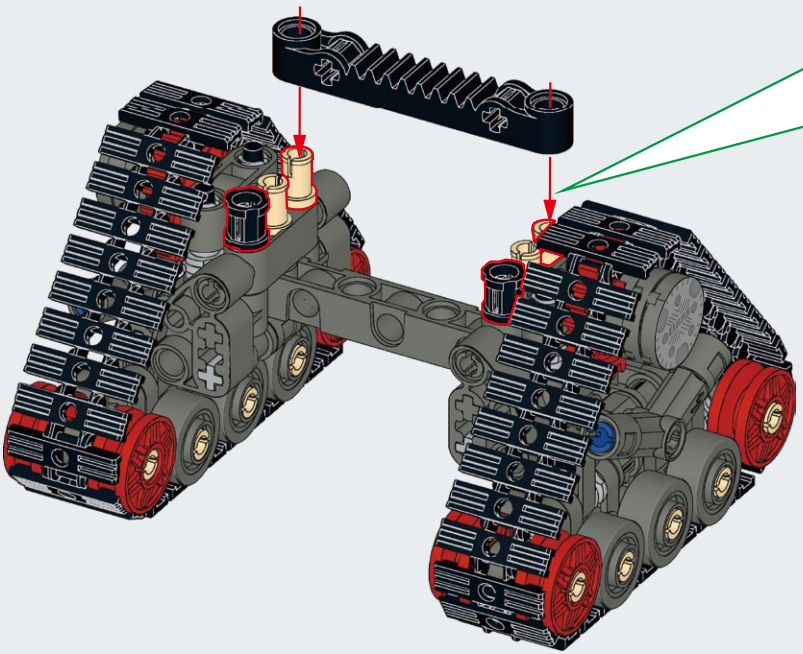

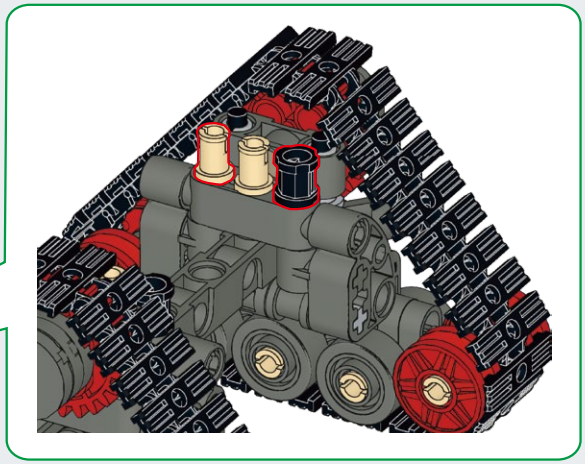

A34

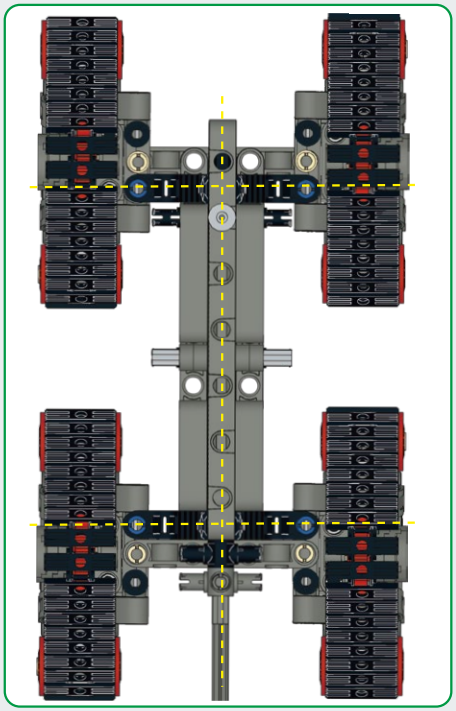

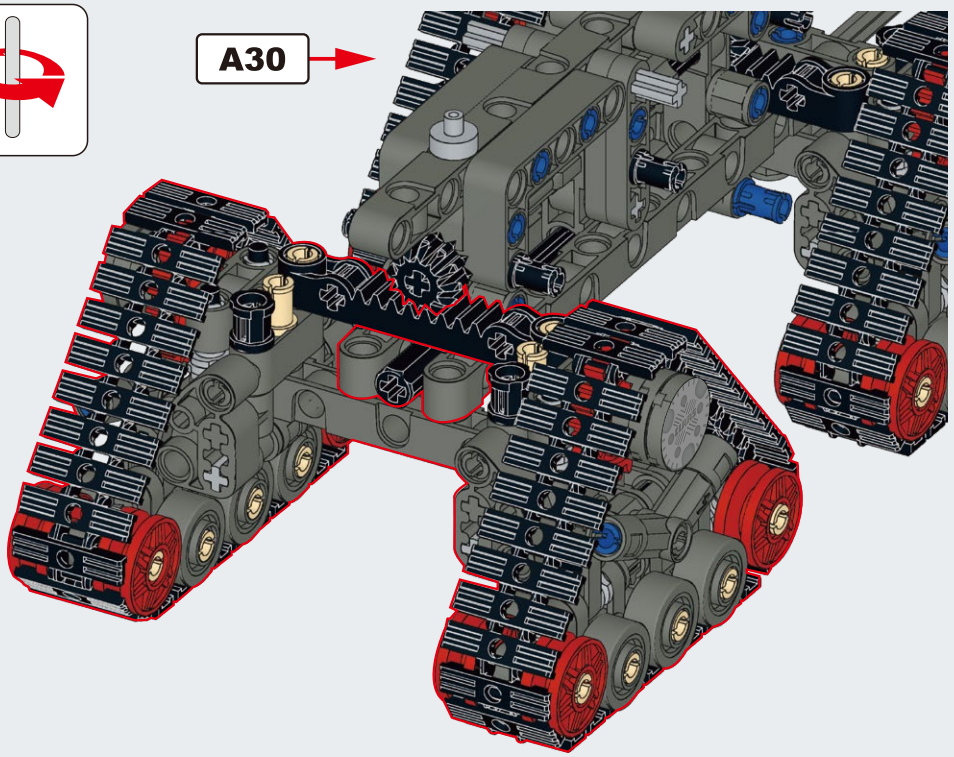

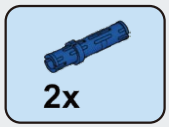

A35

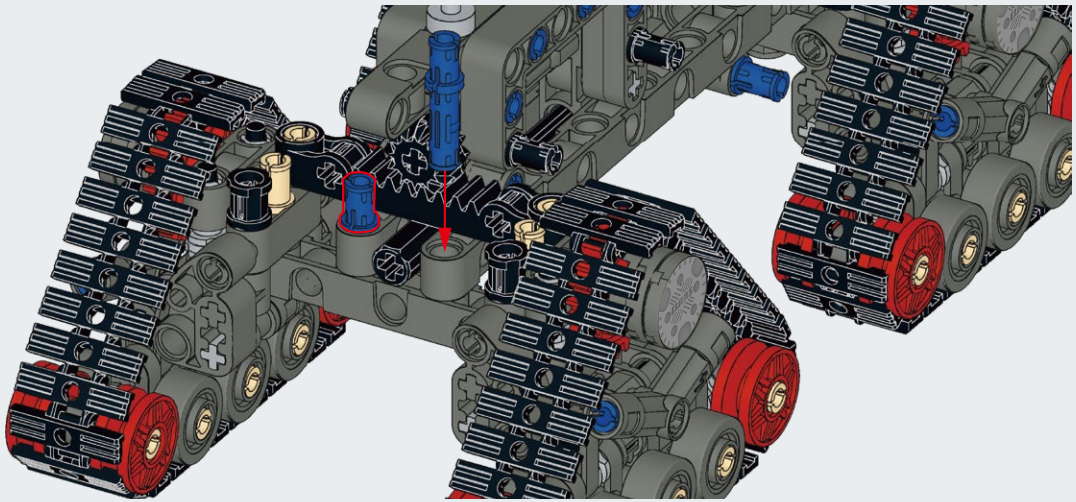

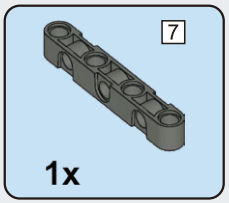

A36

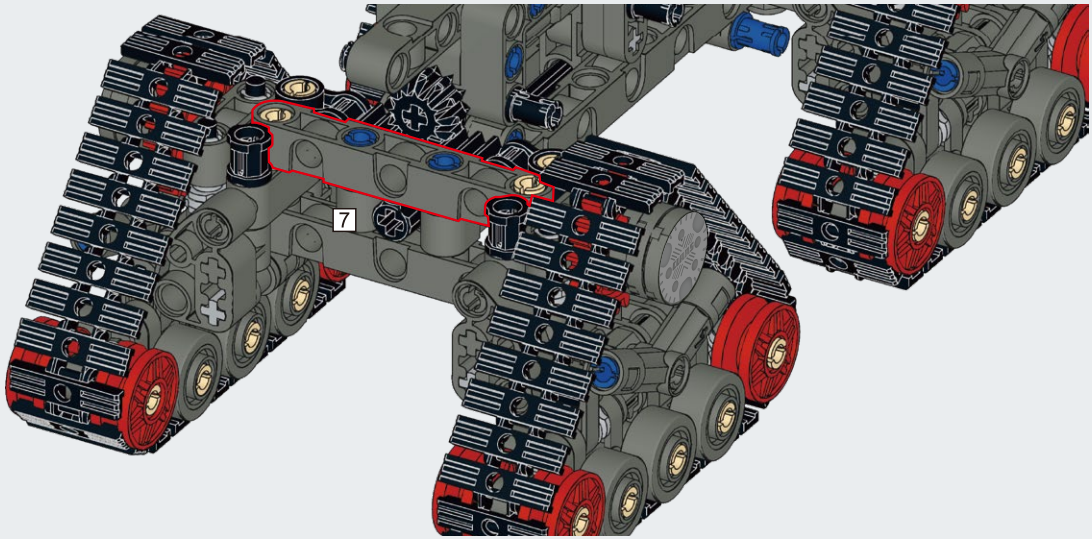

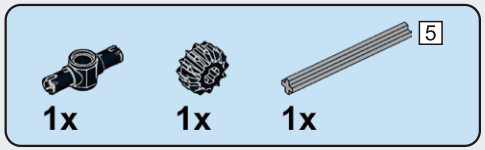

A37

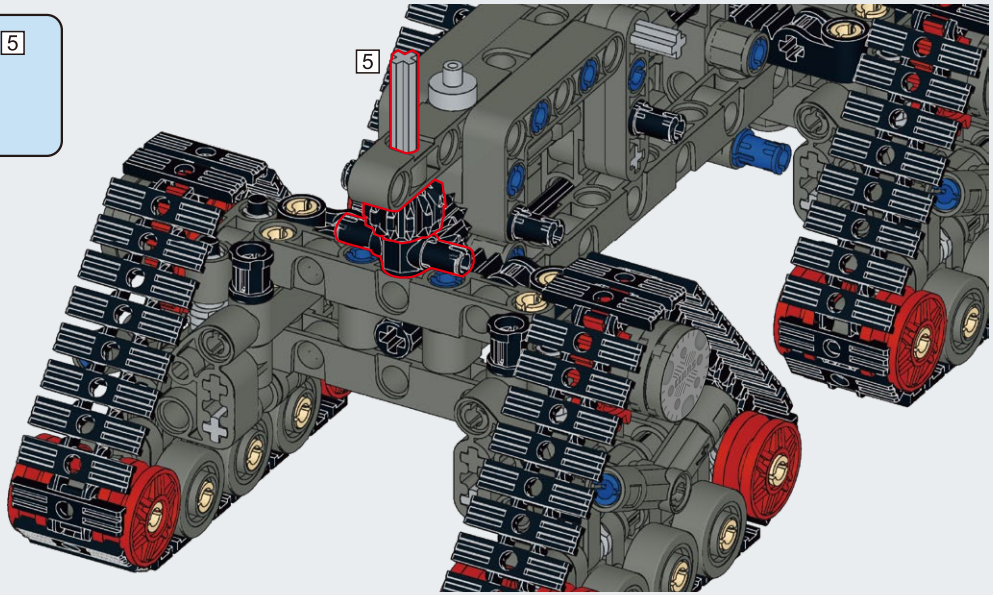

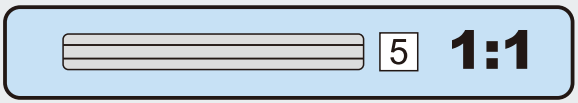

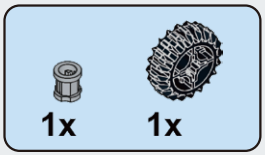

A38

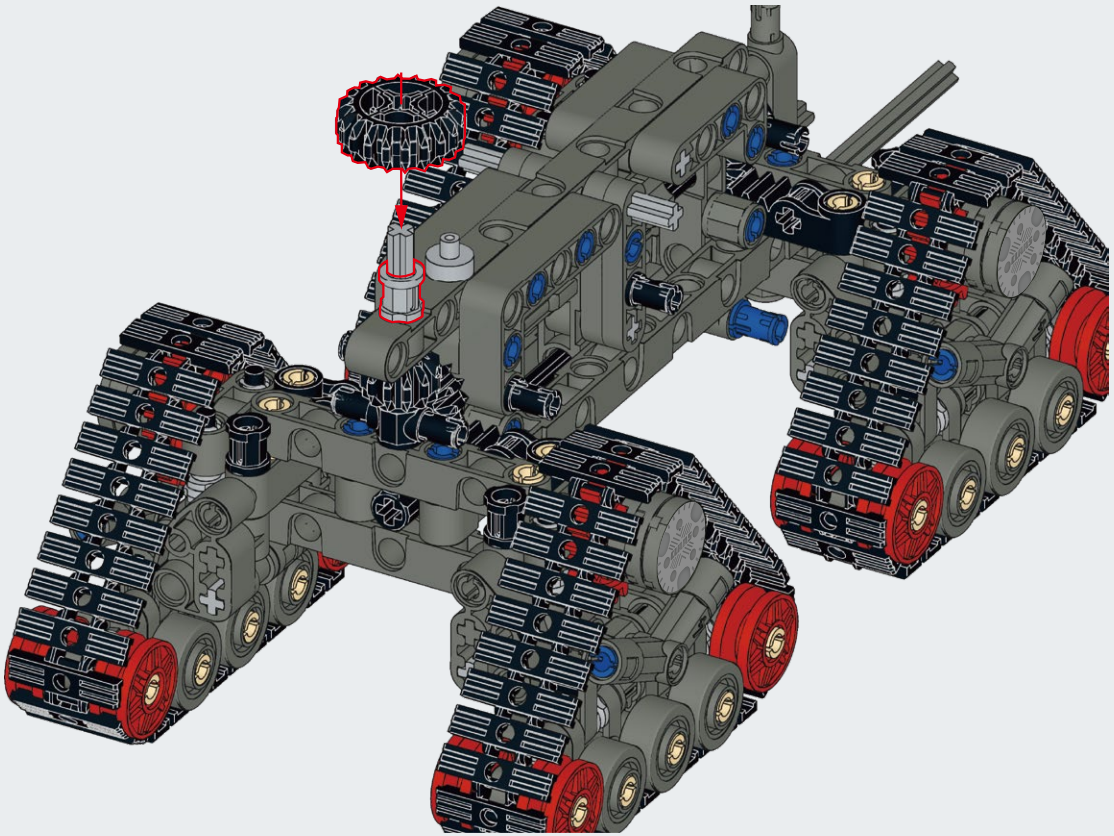

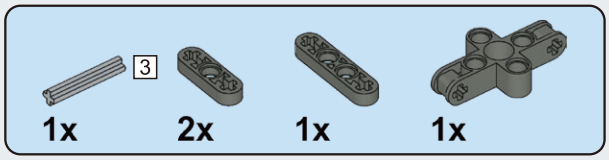

A39

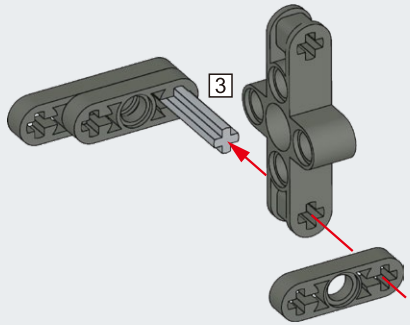

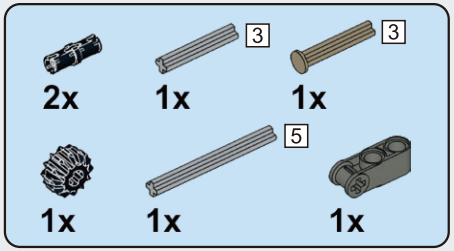

A40

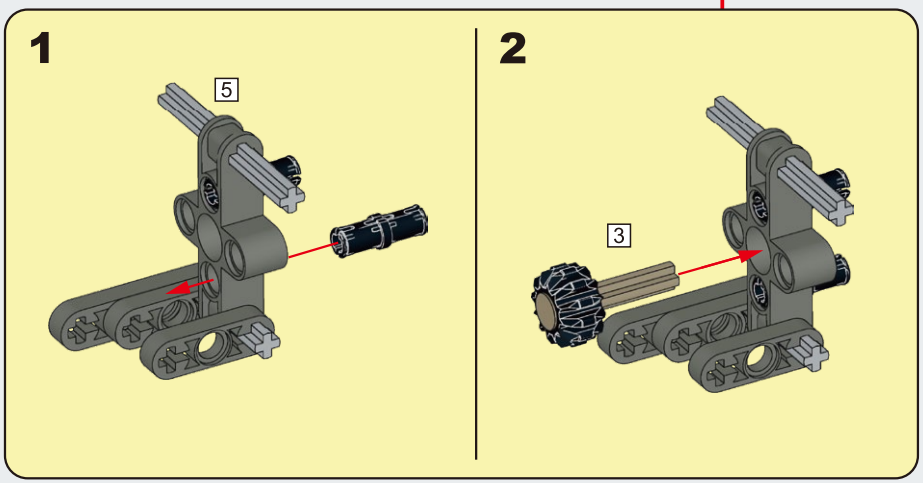

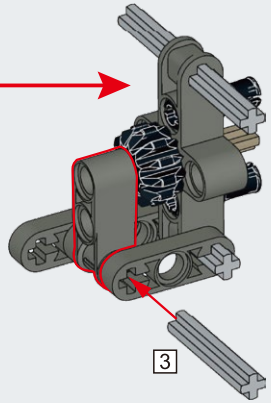

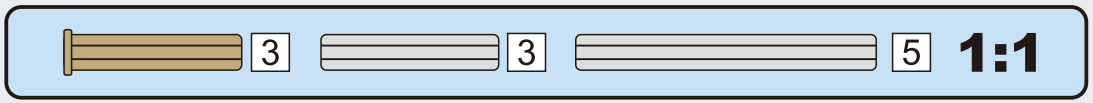

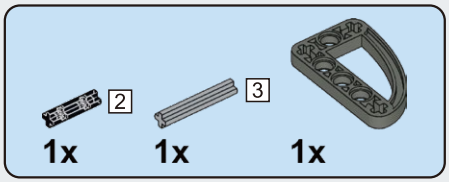

A41

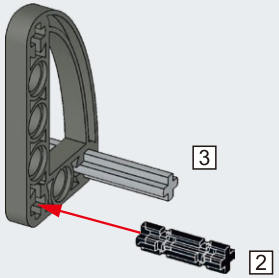

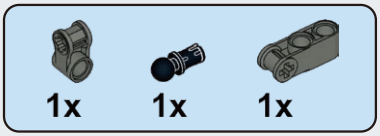

A42

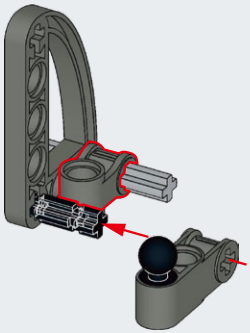

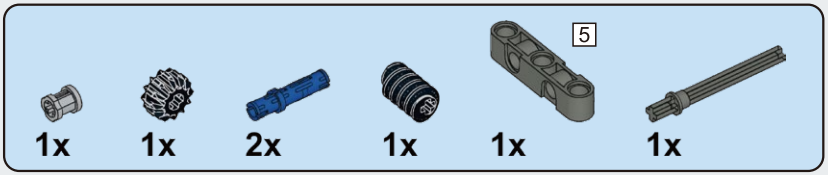

A43

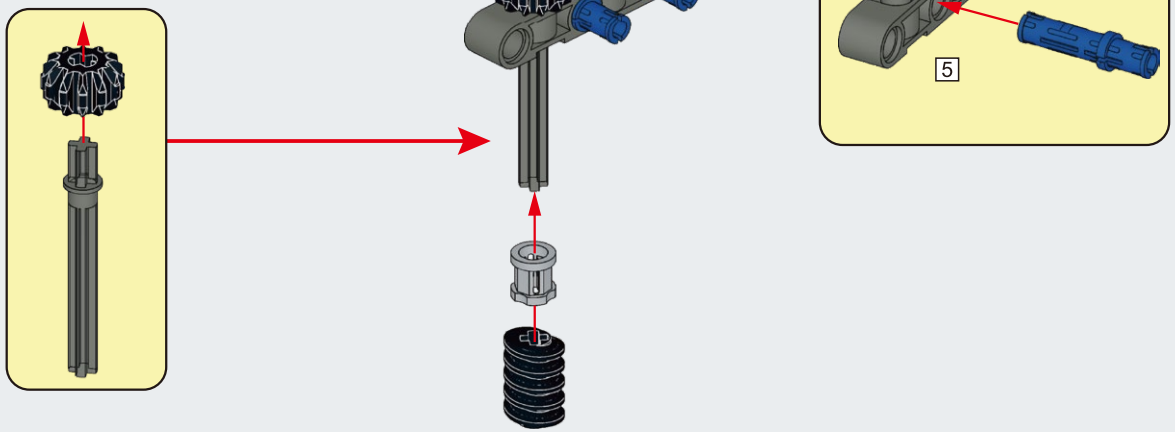

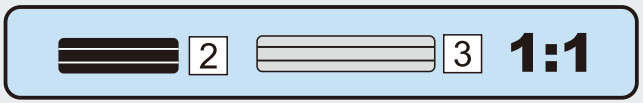

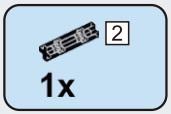

A44

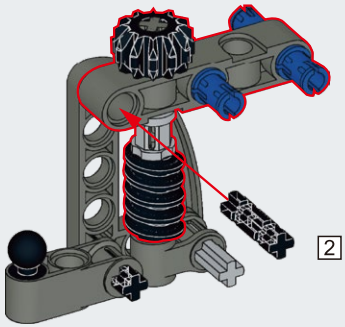

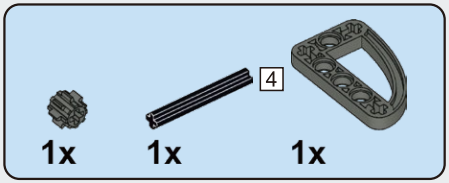

A45

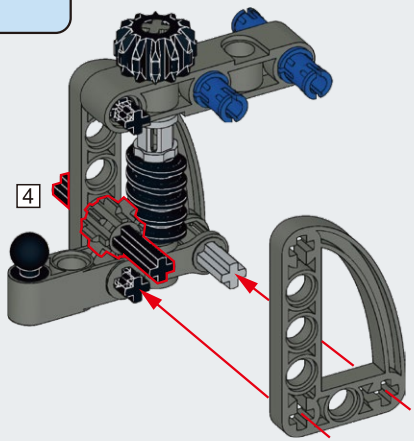

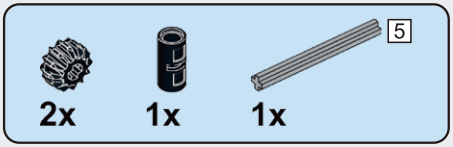

A46

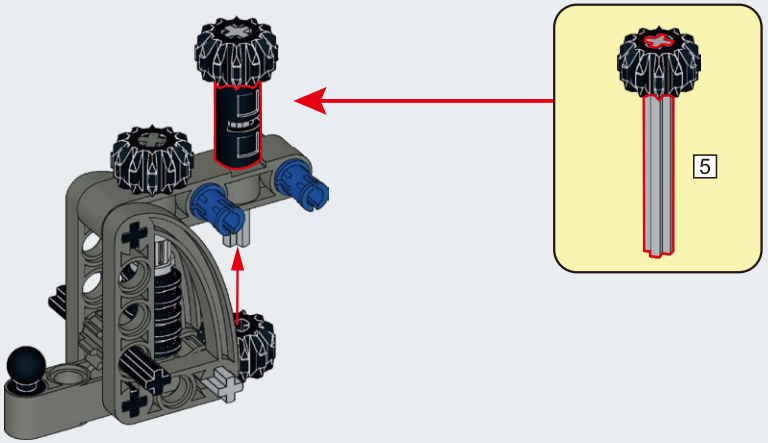

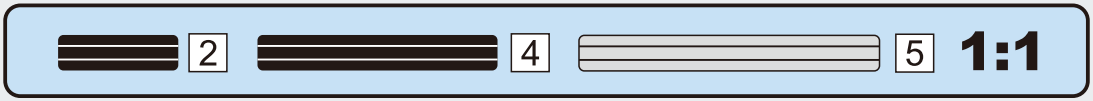

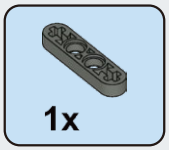

A47

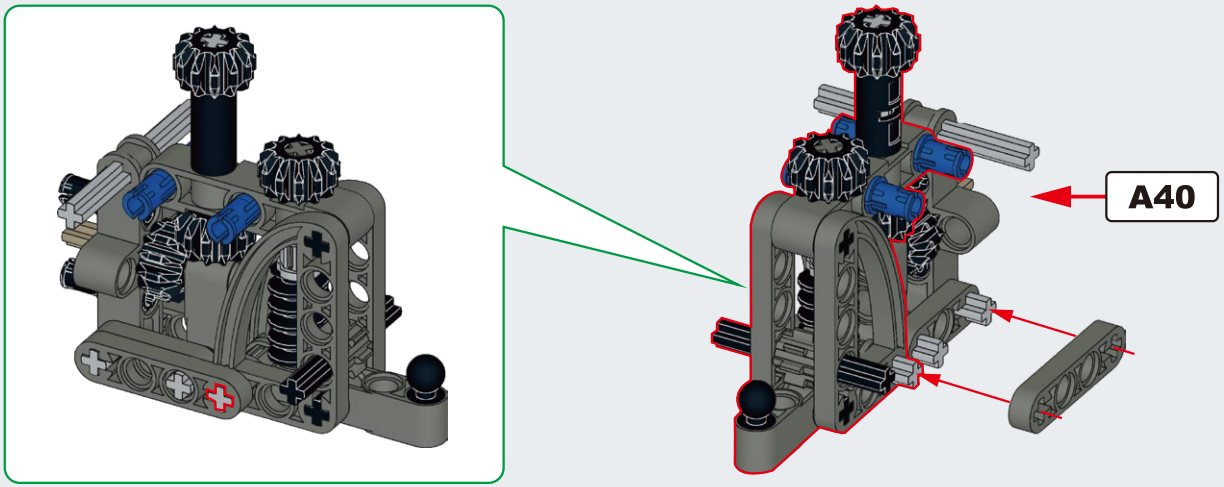

A48

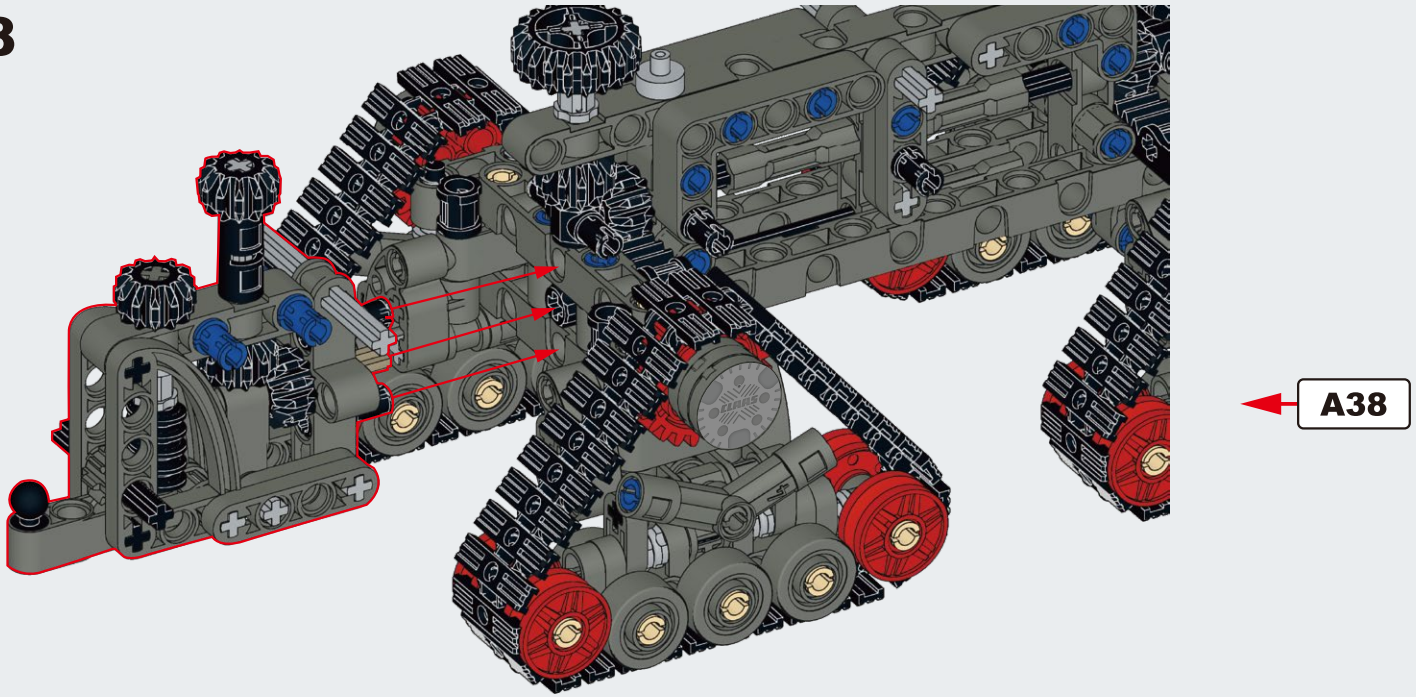

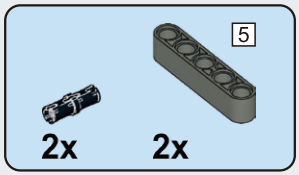

A49

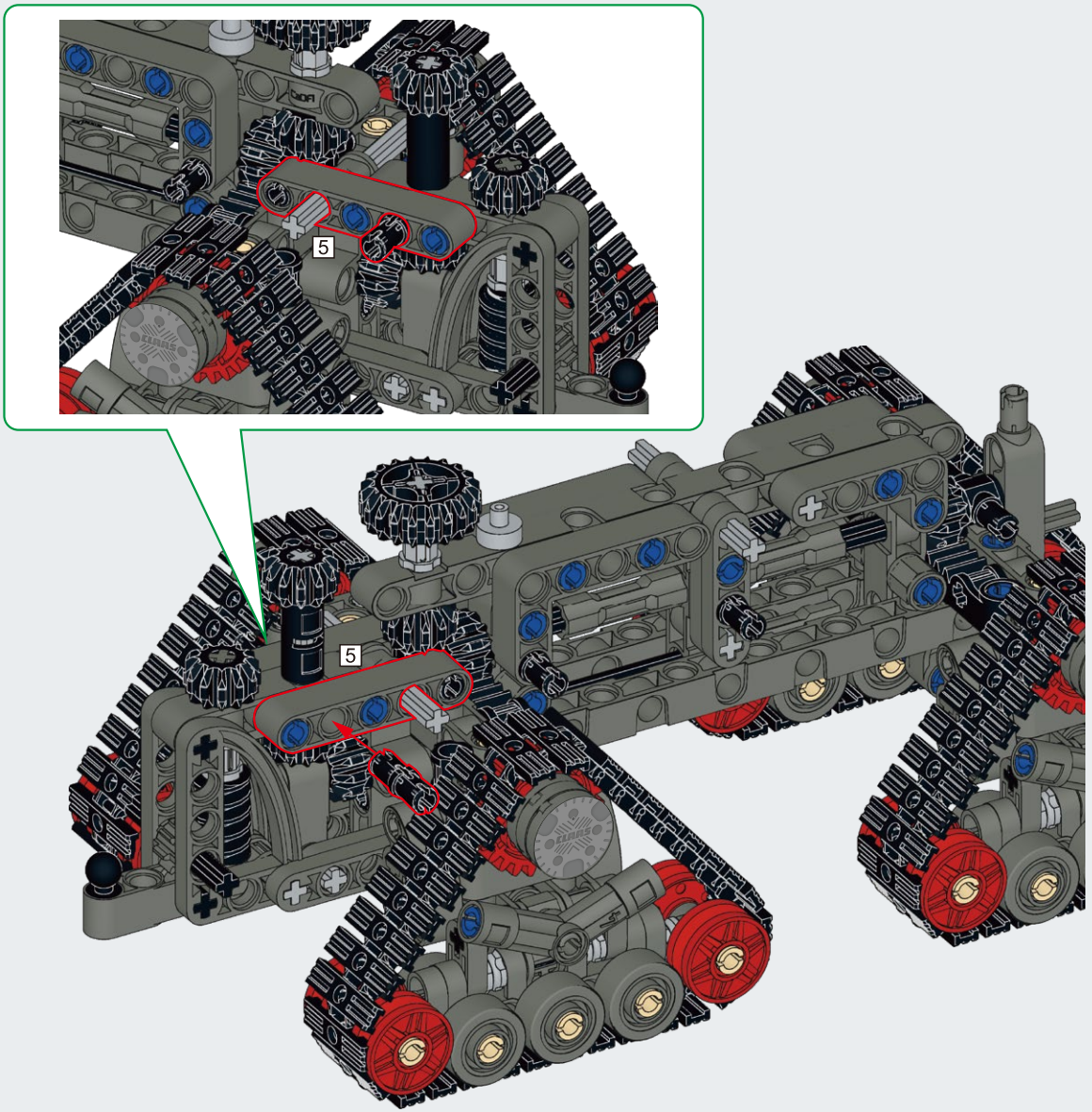

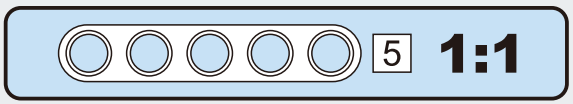

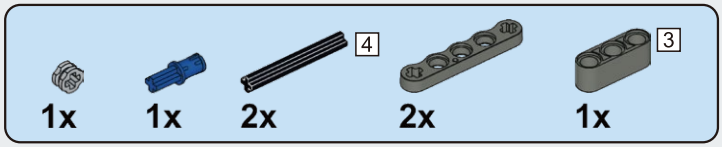

A50

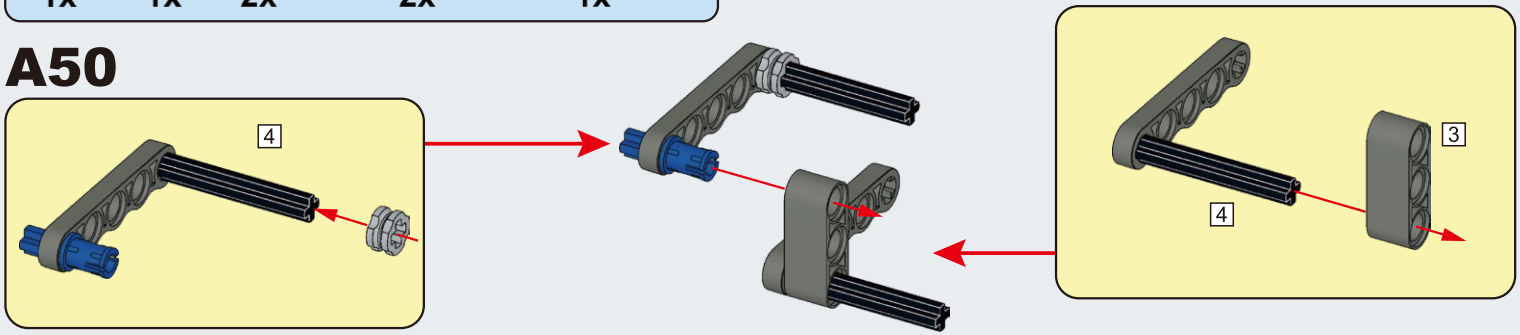

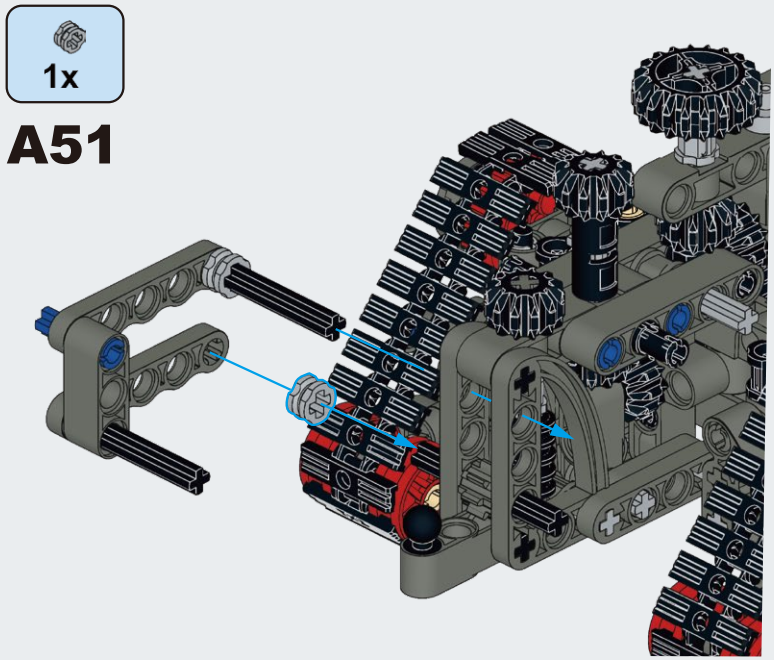

A51

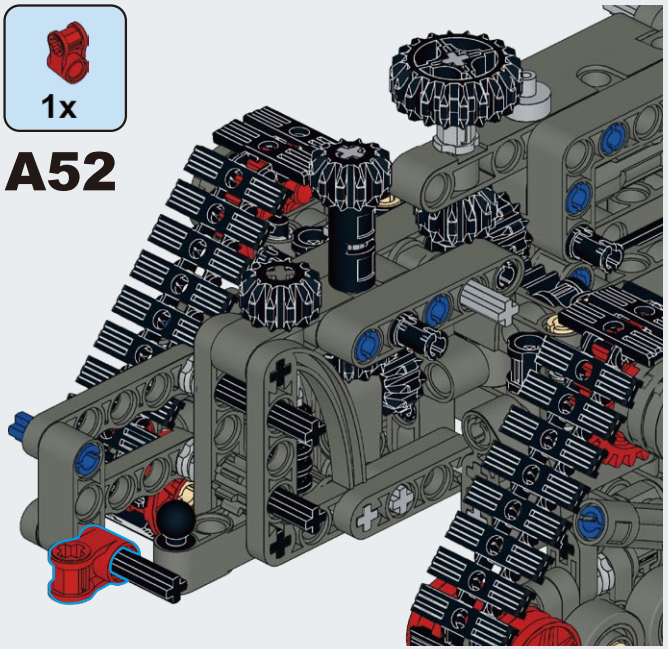

A52

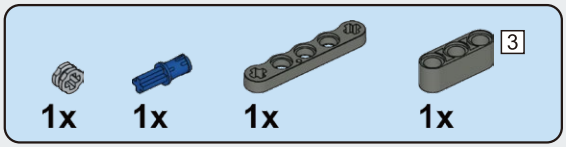

A53

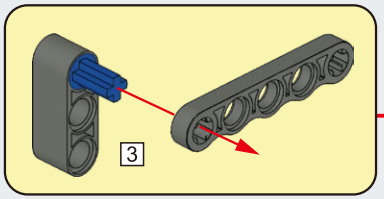

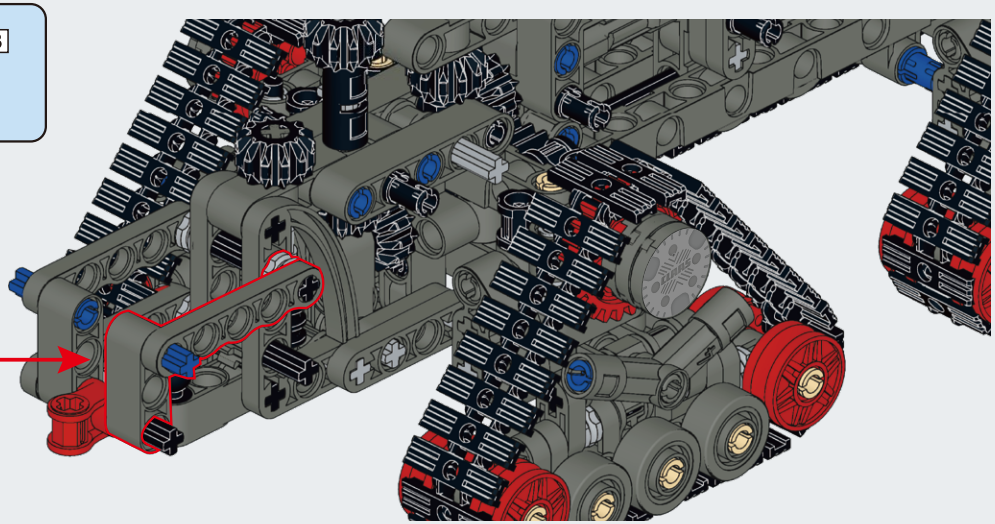

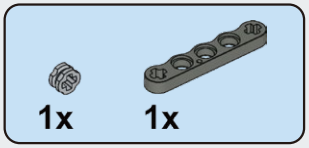

A54

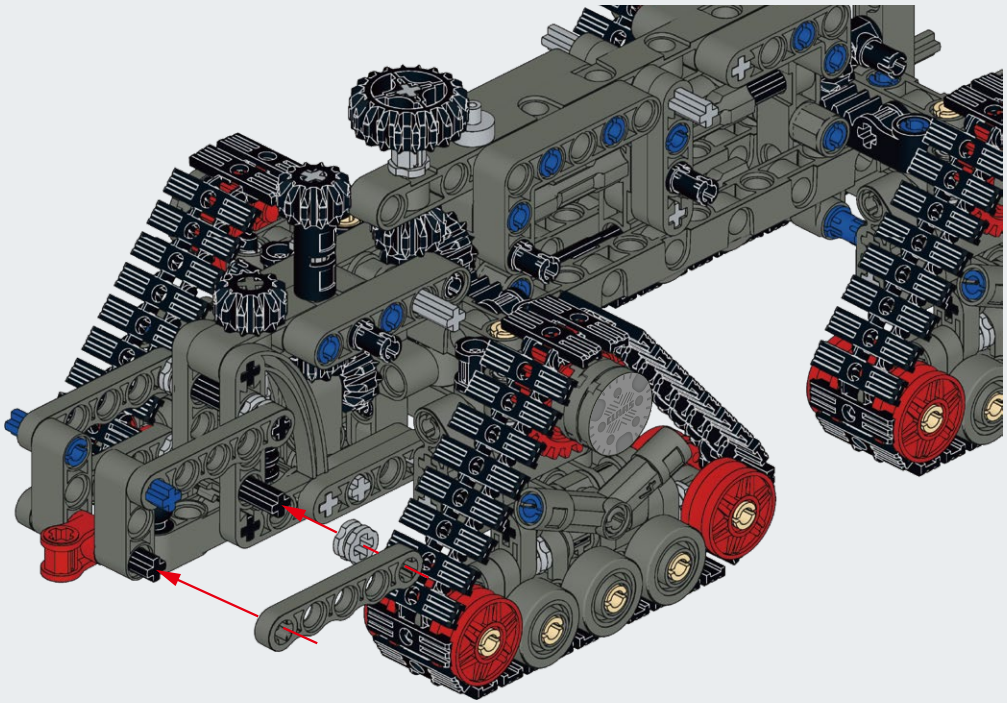

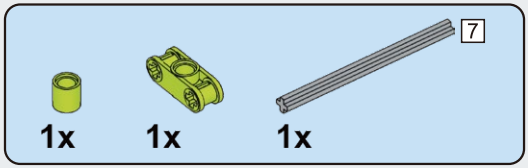

A55

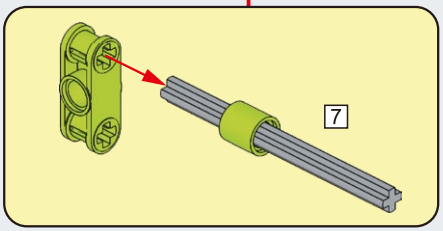

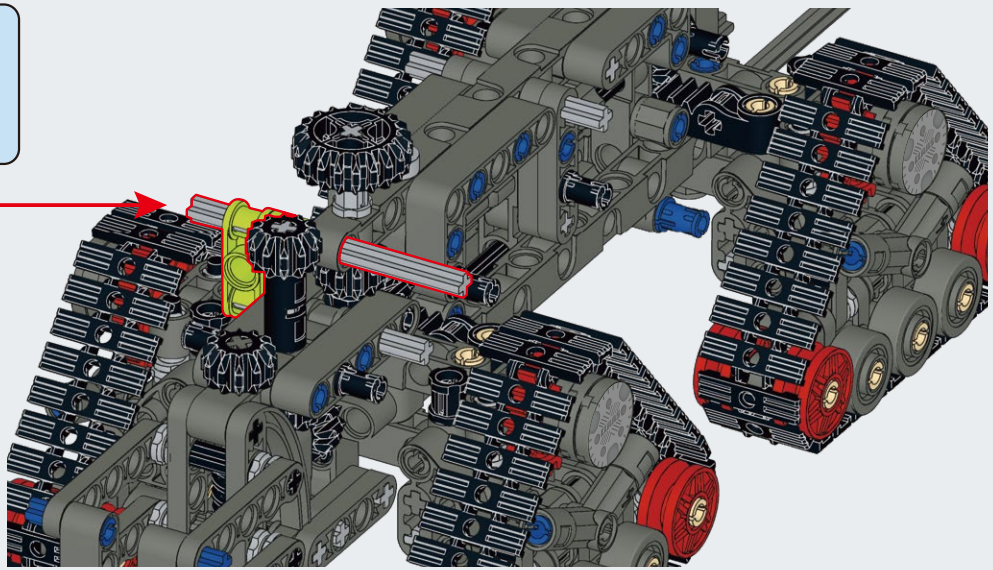

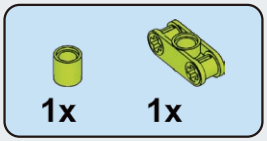

A56

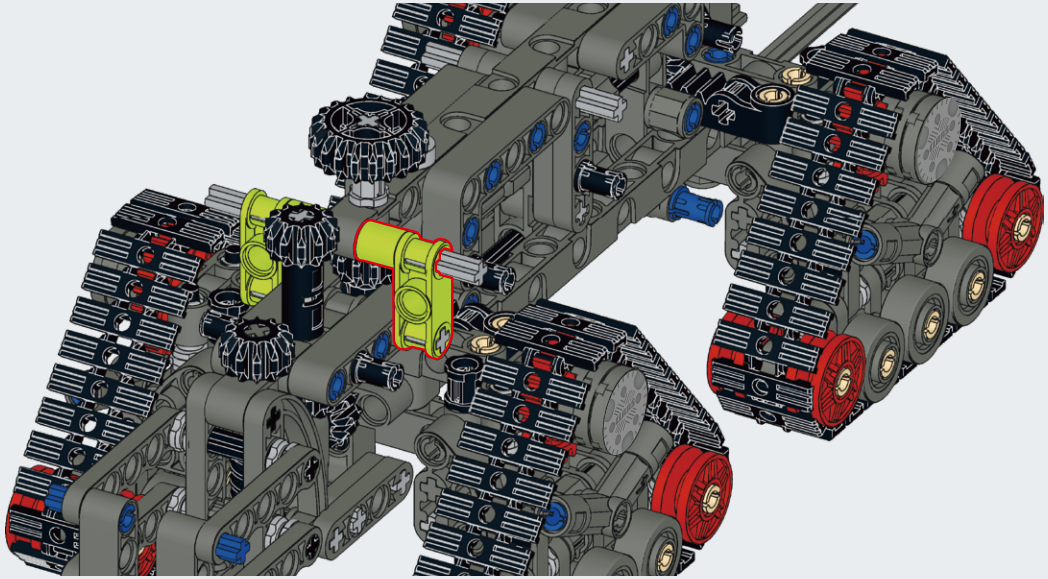

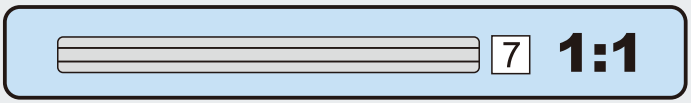

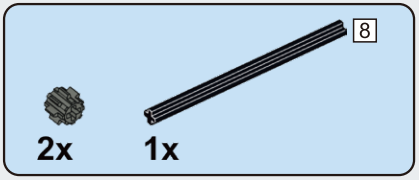

A57

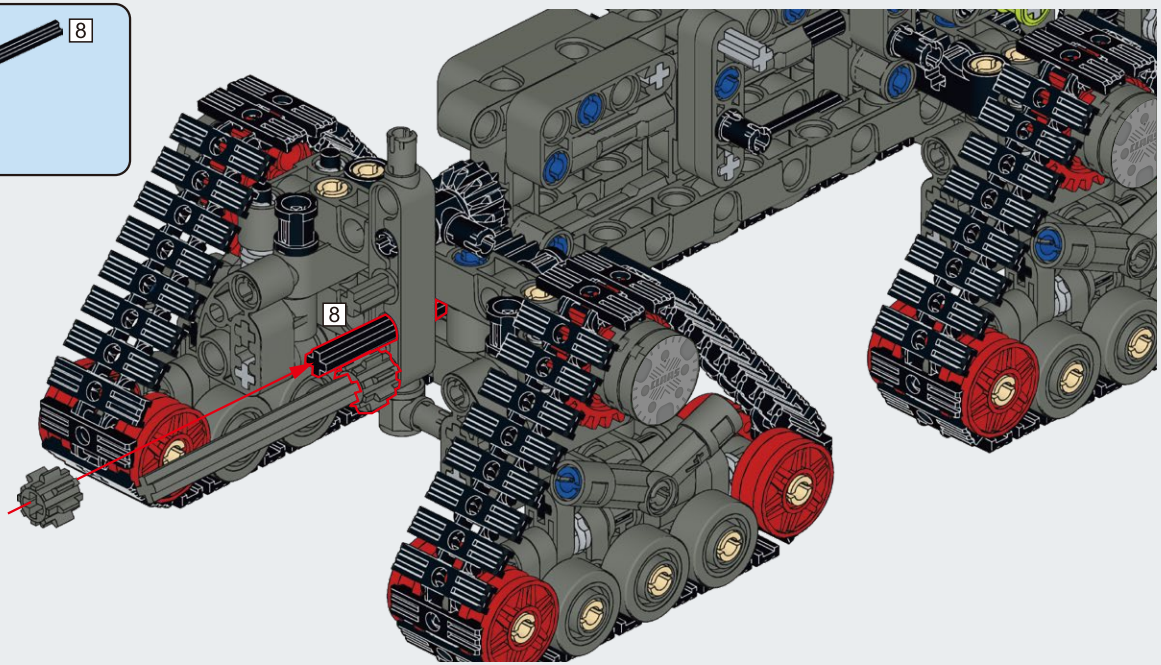

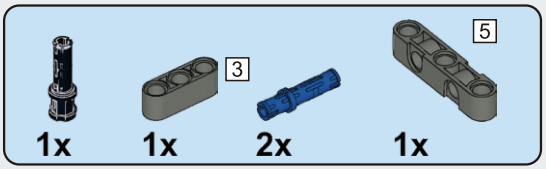

A58

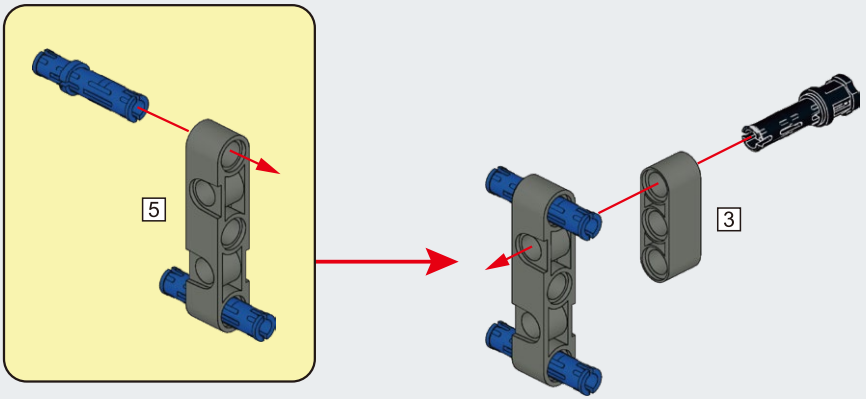

1x

A59

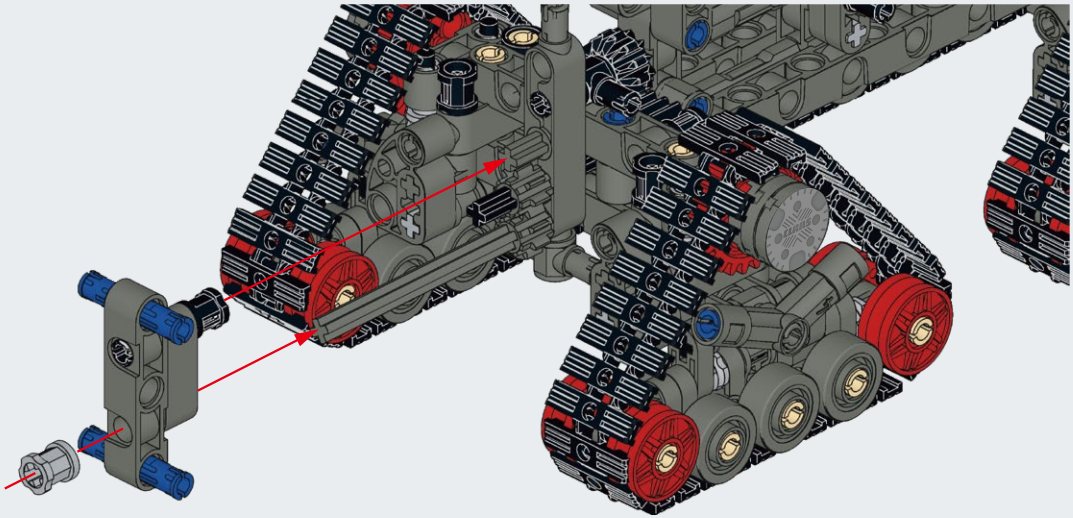

4x

A60

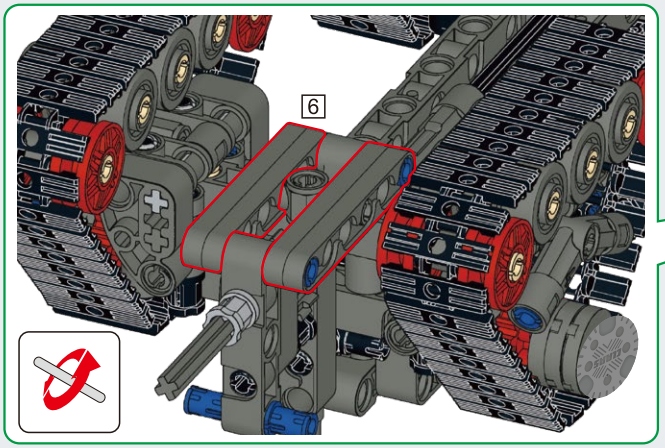

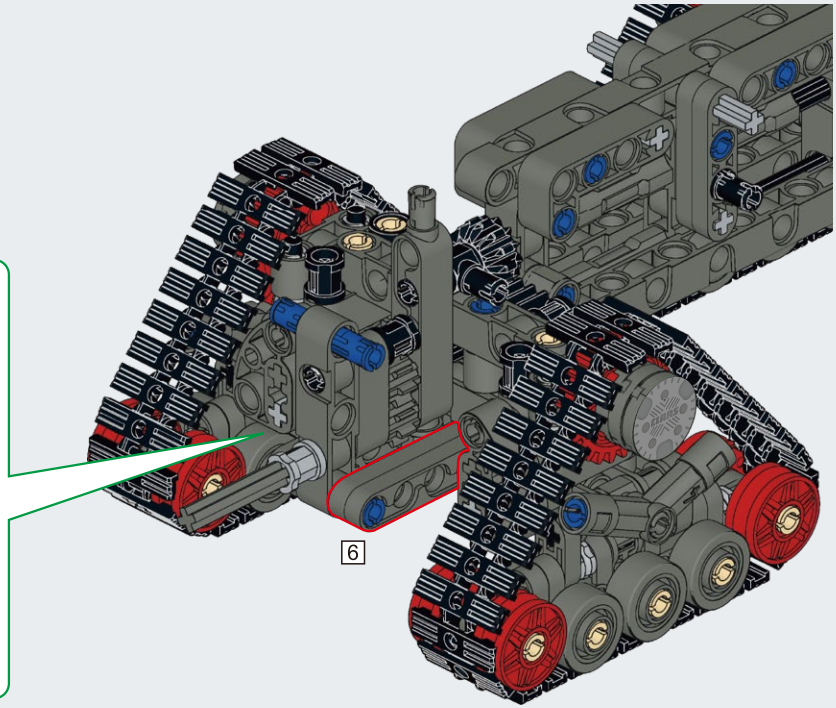

A61

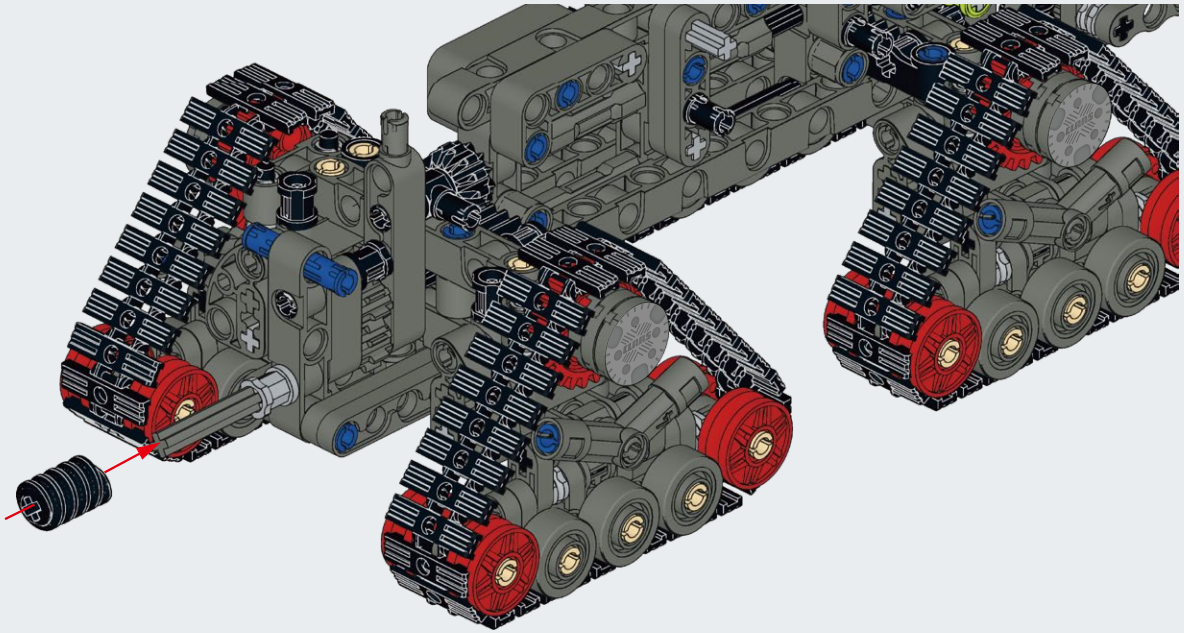

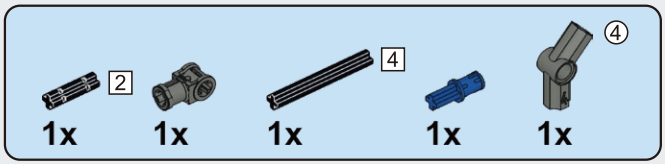

A62

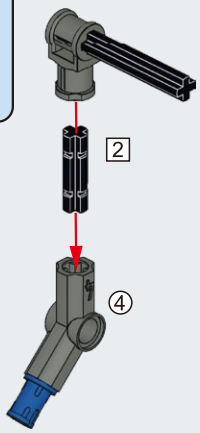

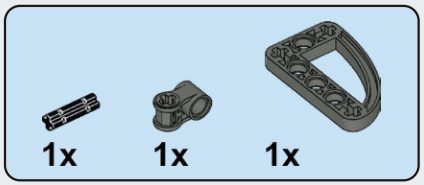

A63

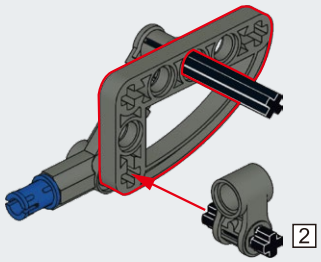

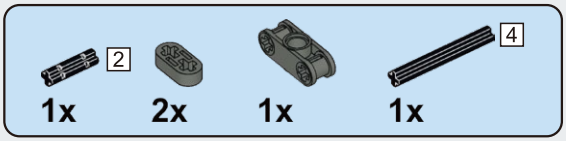

A64

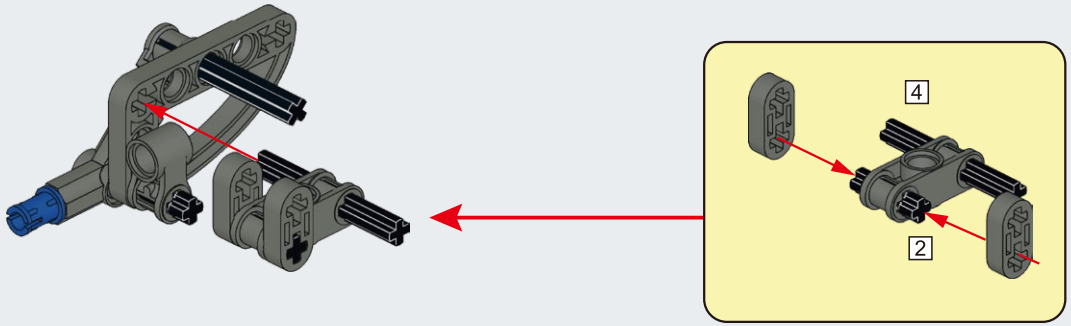

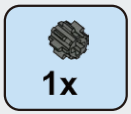

A65

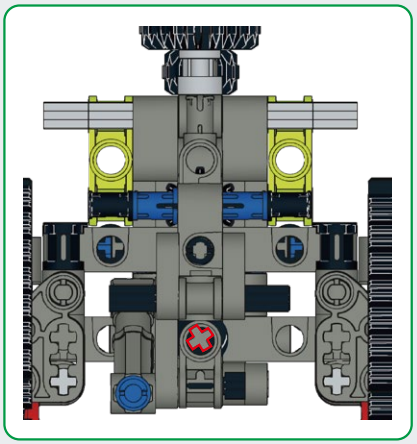

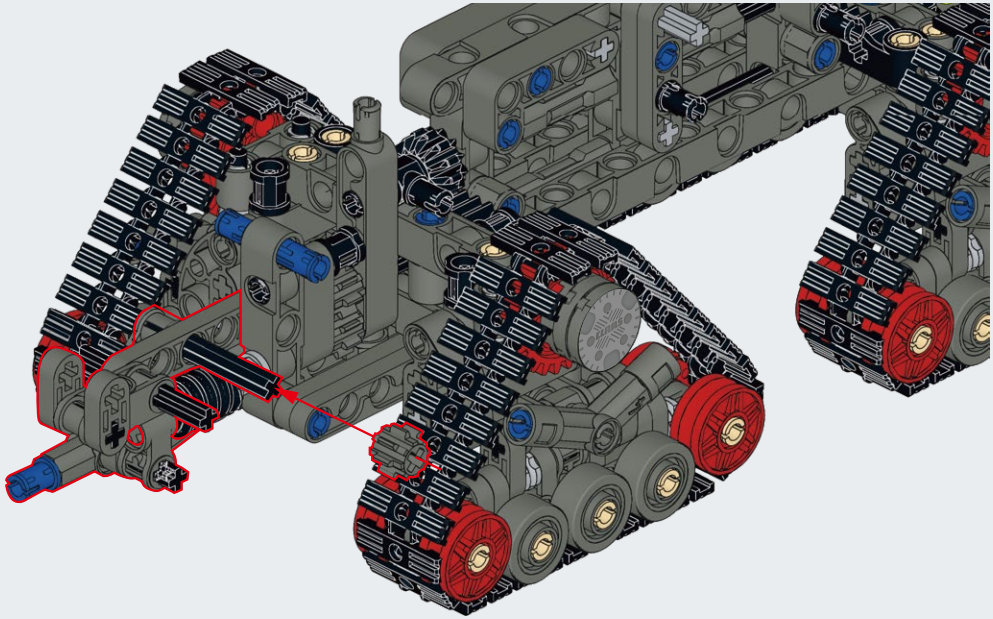

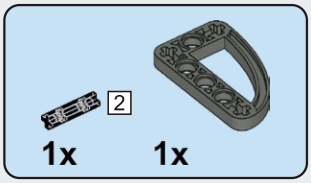

A66

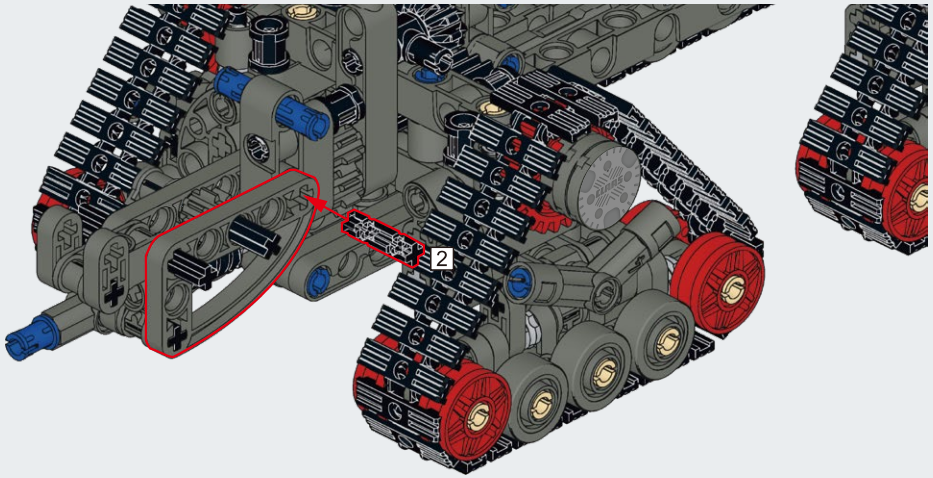

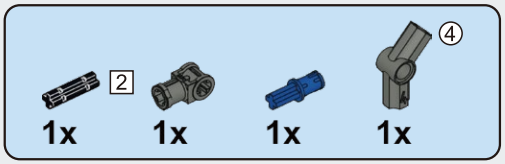

A67

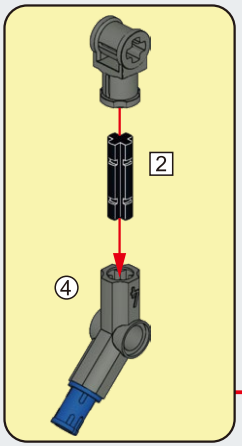

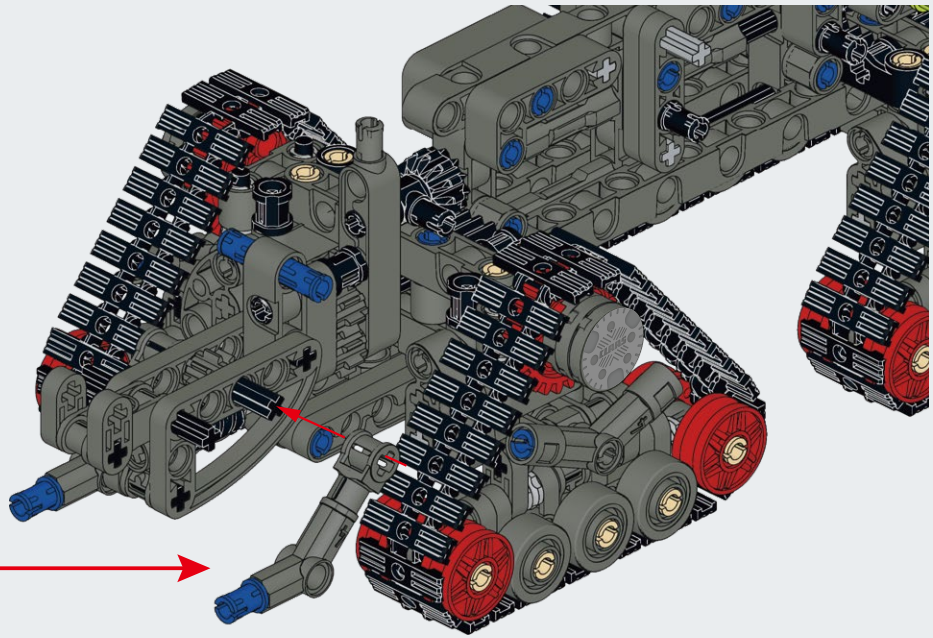

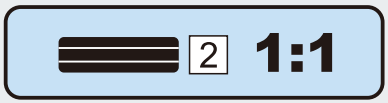

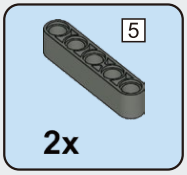

A68

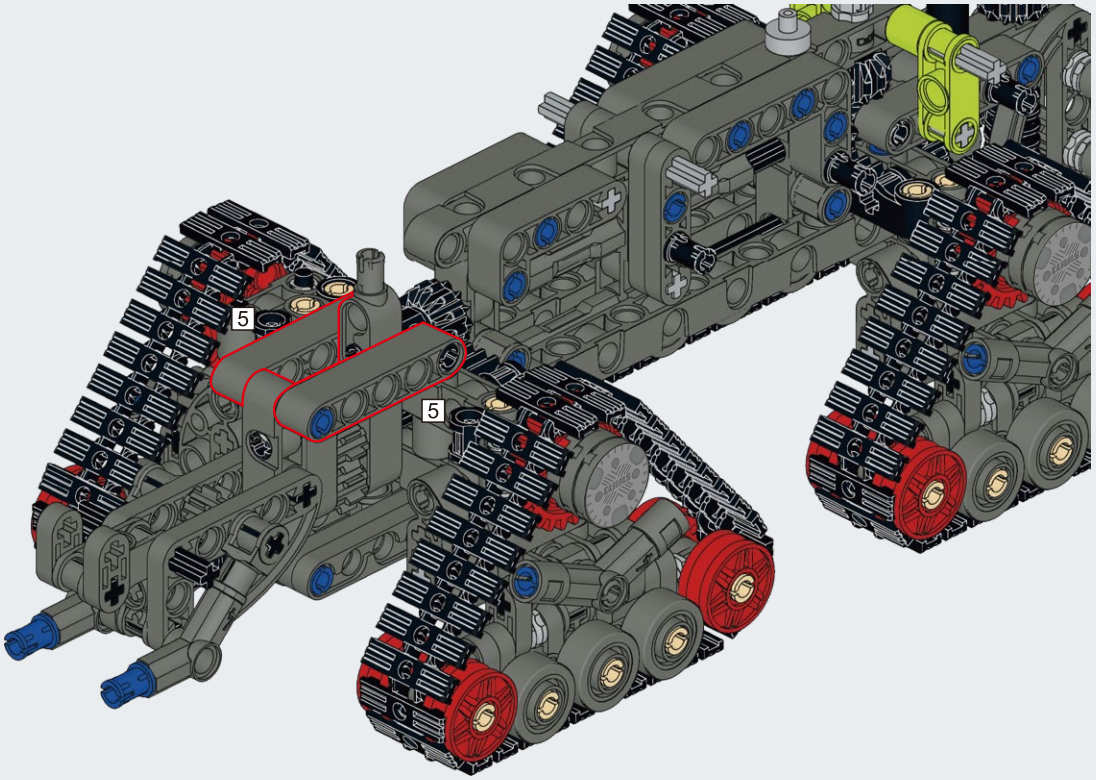

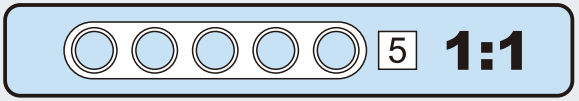

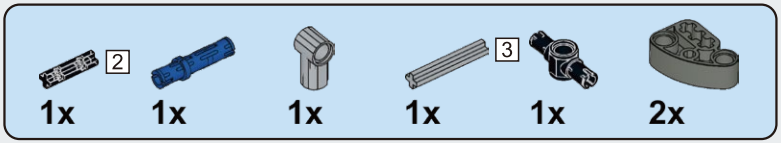

A69

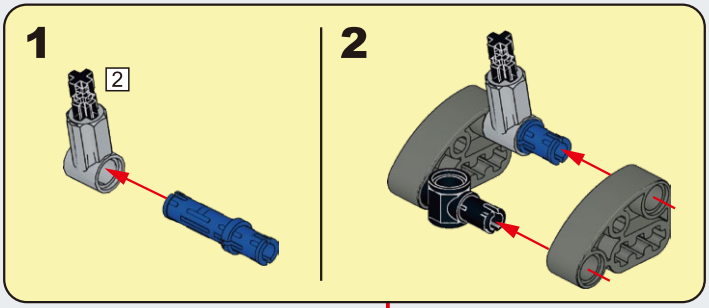

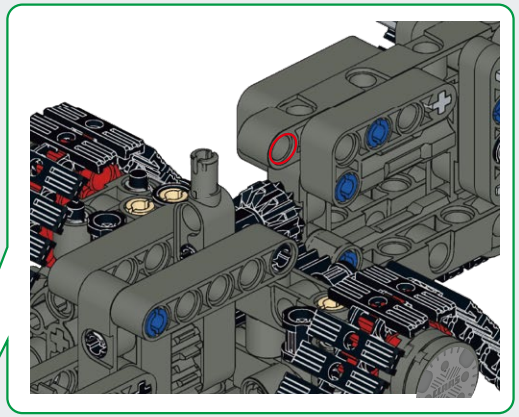

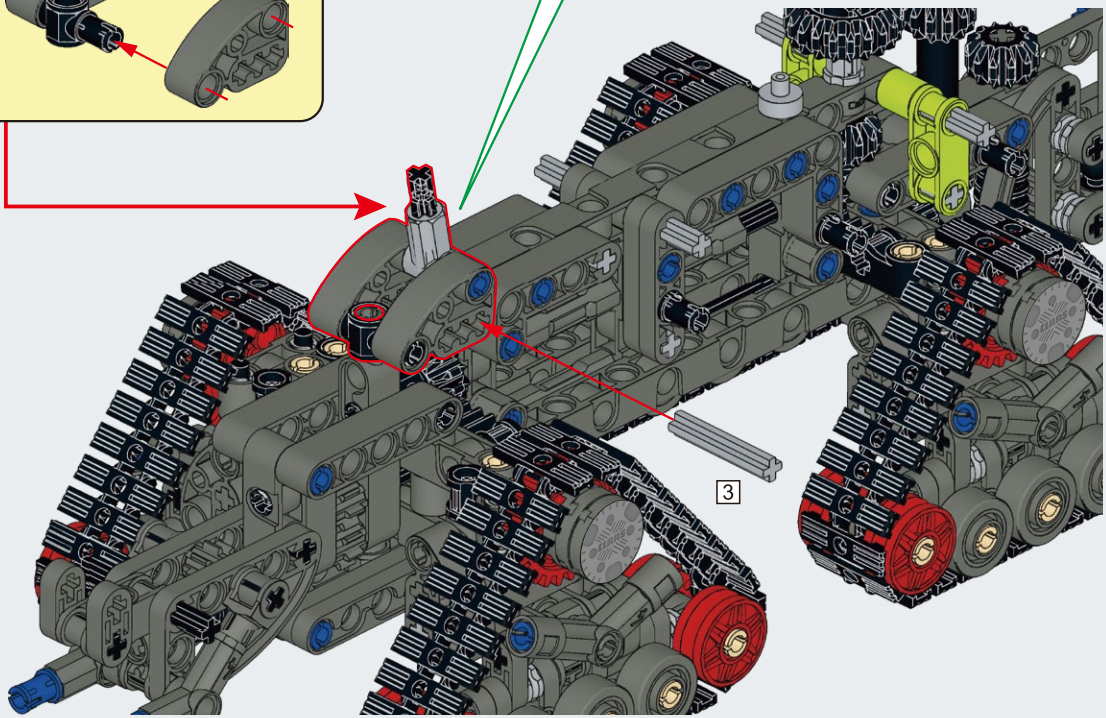

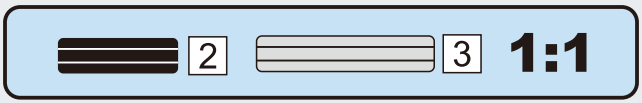

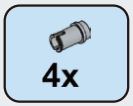

A70

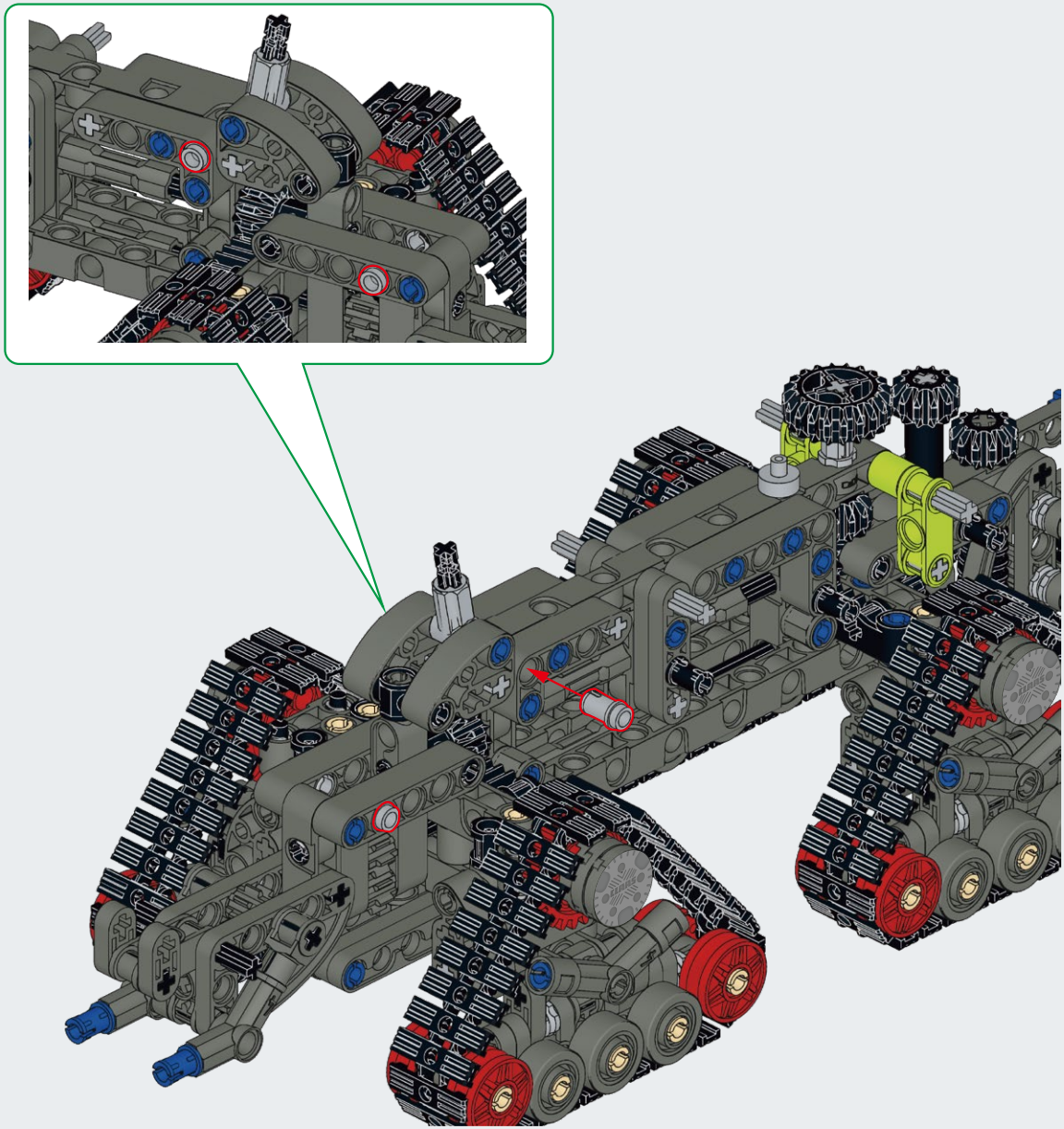

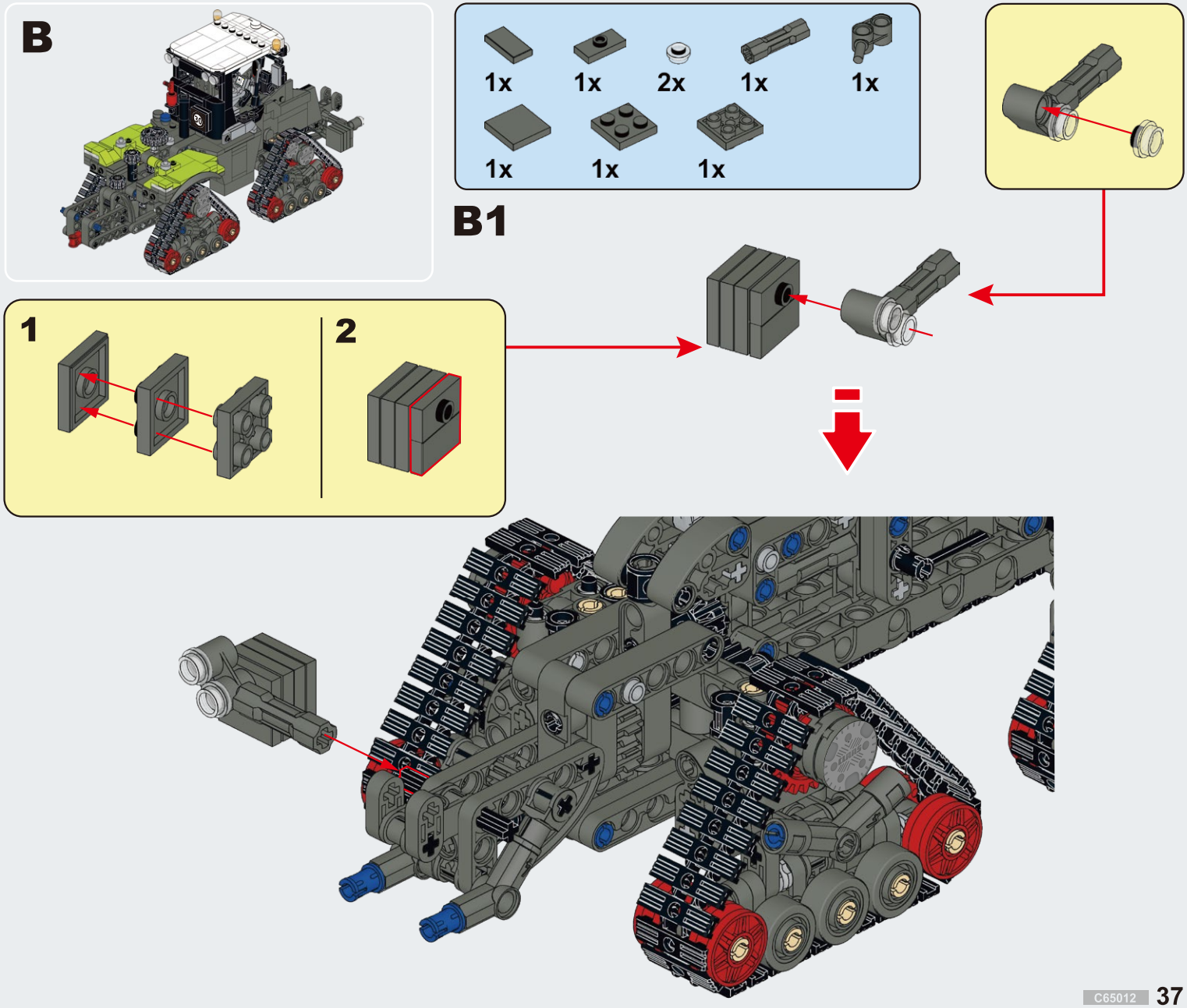
B
1x
1x
2x
1x
1x
1x
1x
1x
B1
1
2

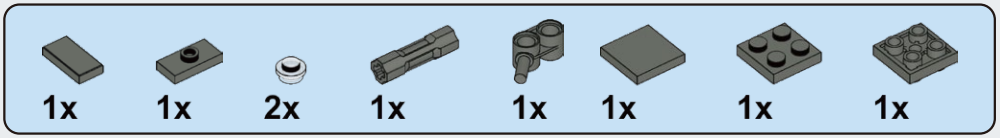

B2

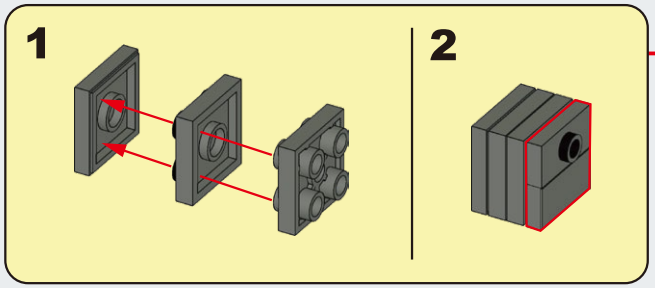

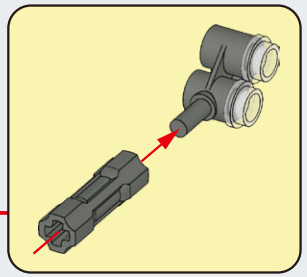

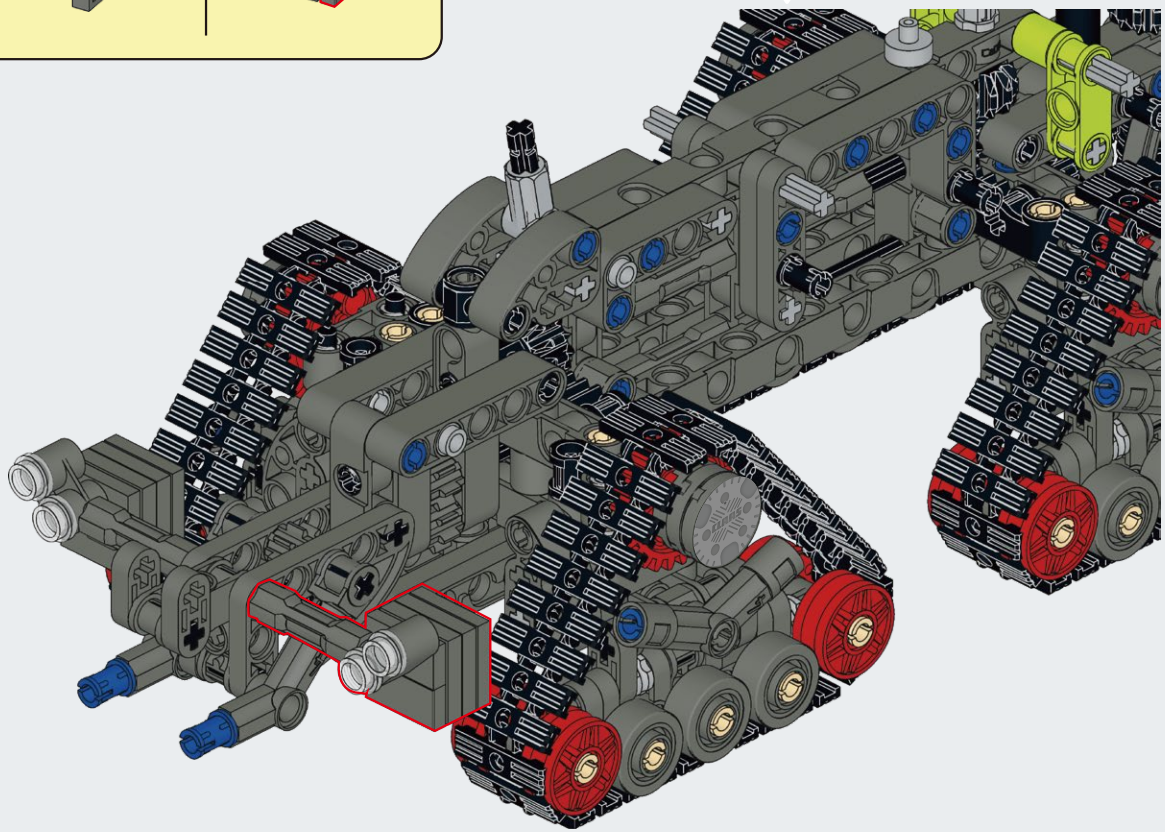

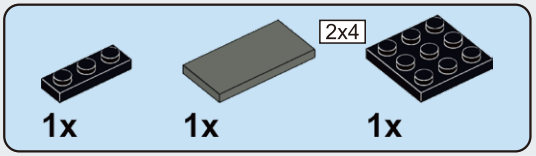

B3

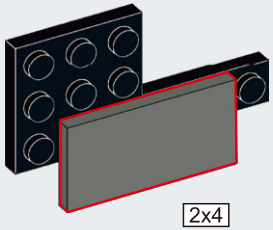

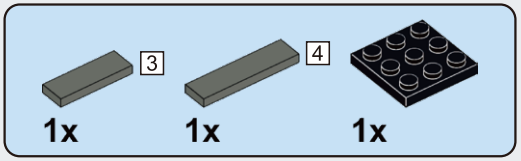

B4

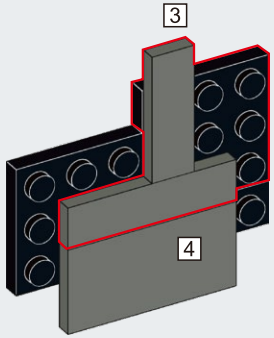

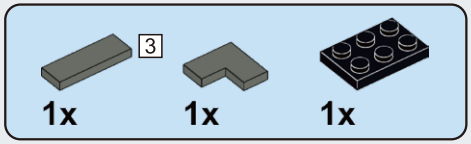

B5

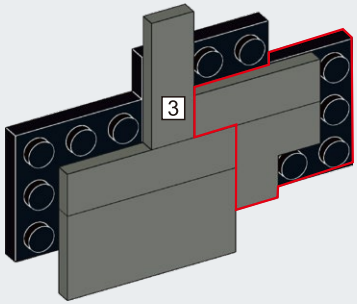

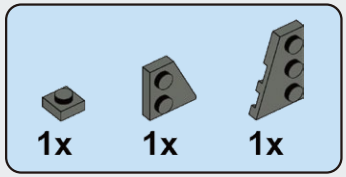

B6

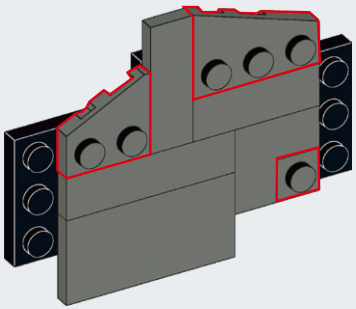

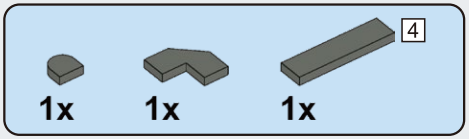

B7

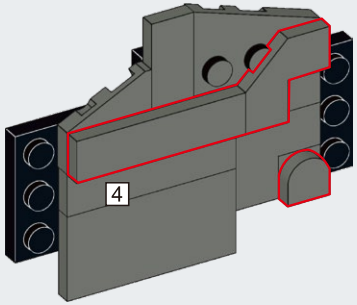

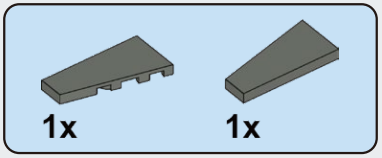

B8

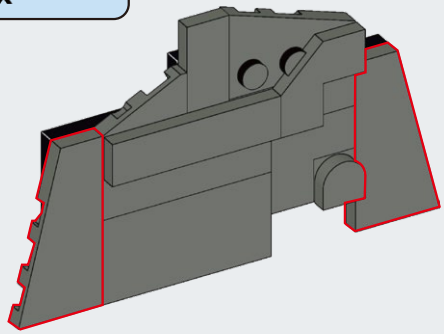

B9

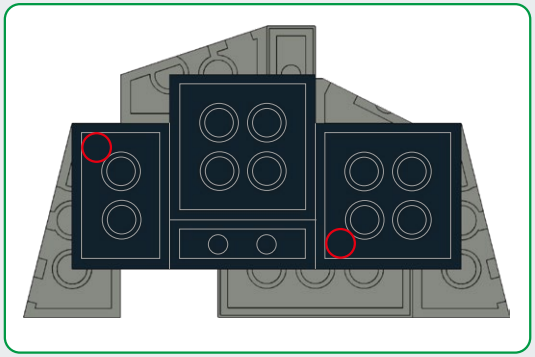

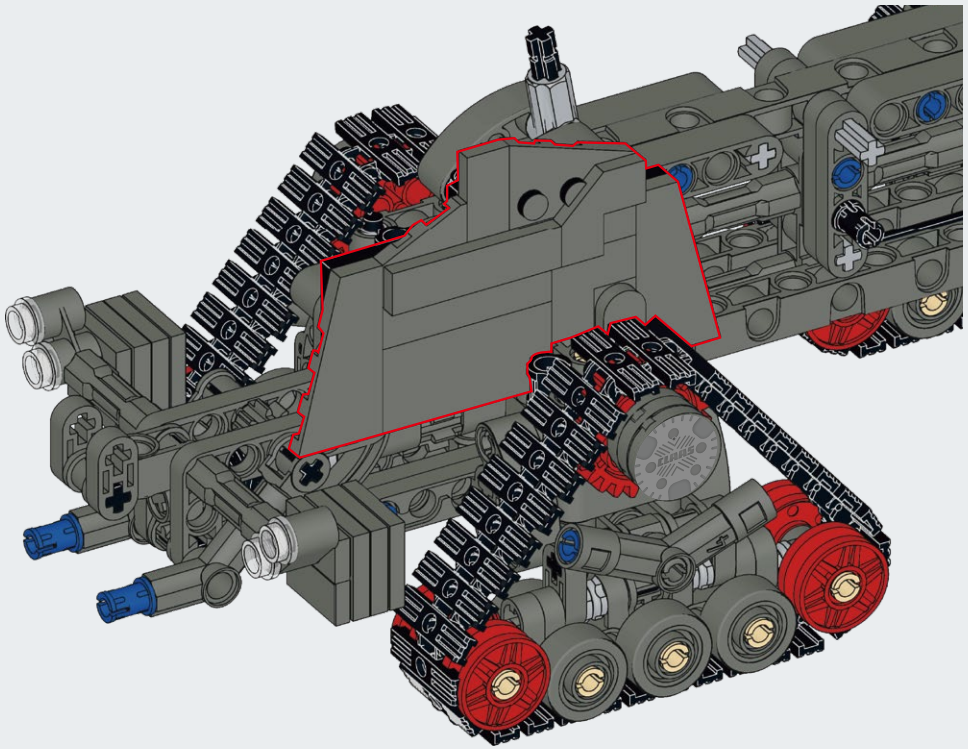

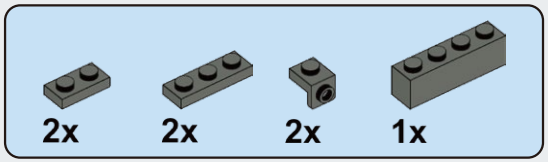

B10

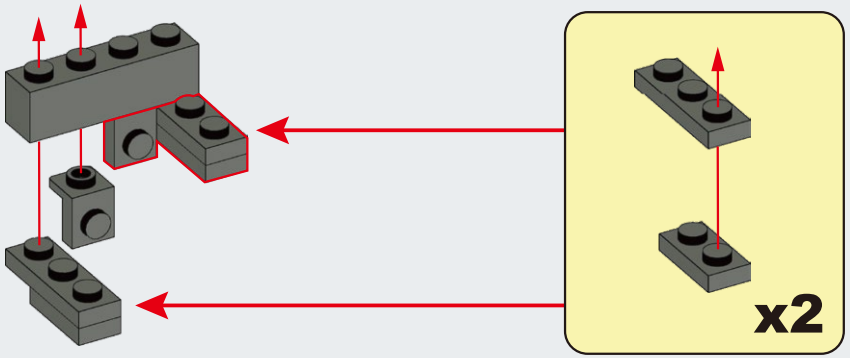

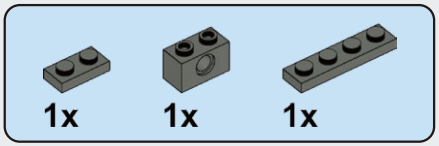

B11

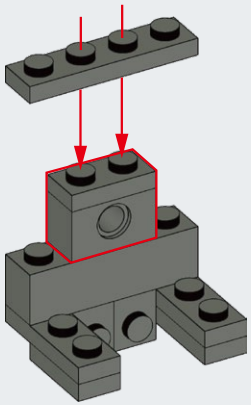

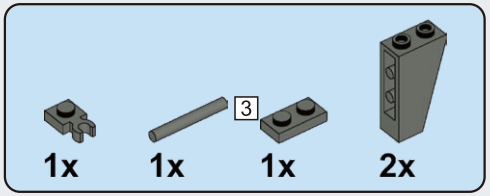

B12

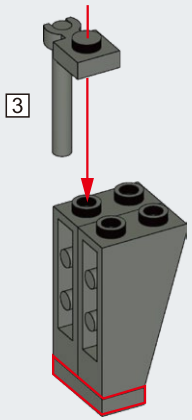

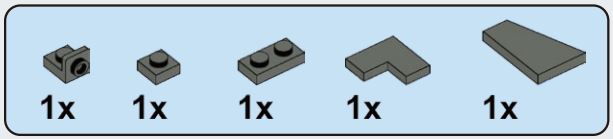

B13

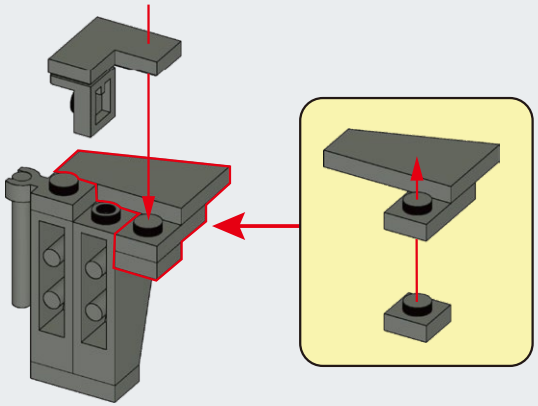

B14

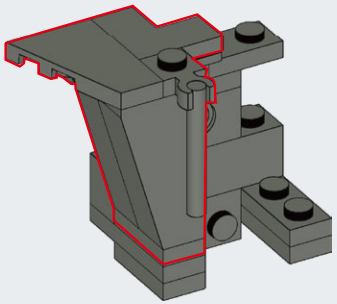

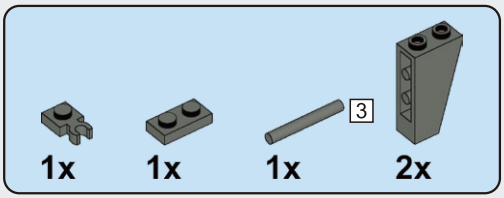

B15

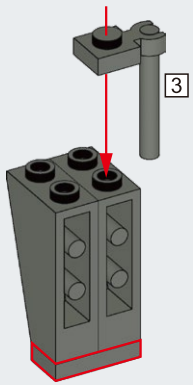

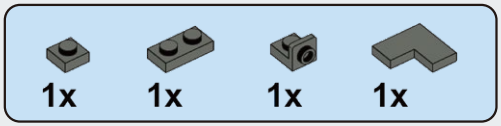

B16

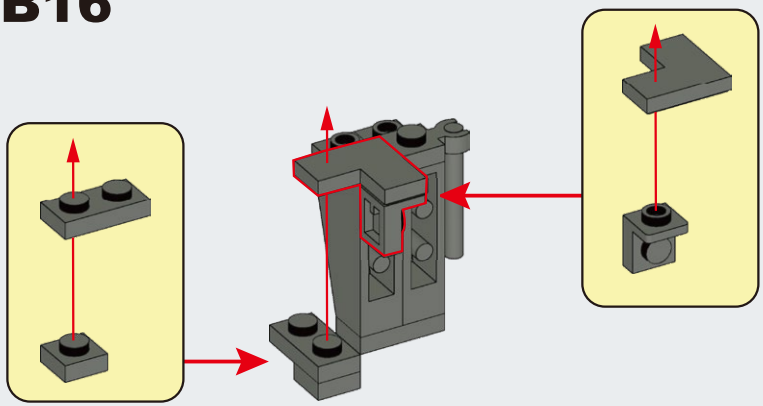

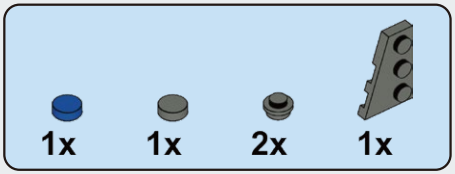

B17

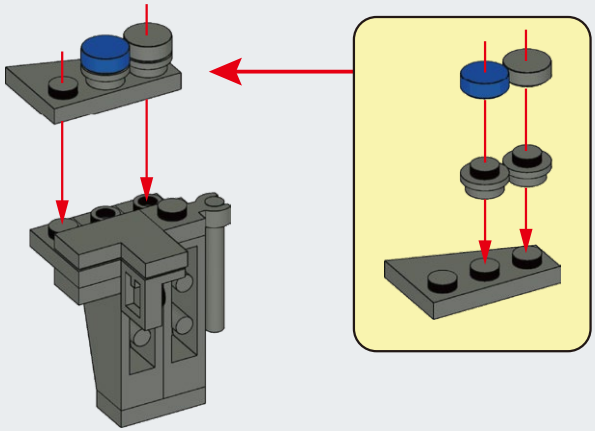

B18

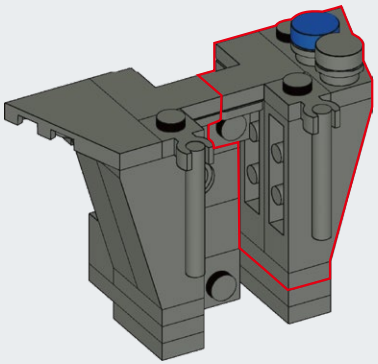

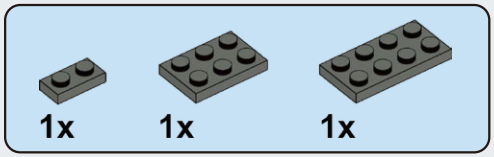

B19

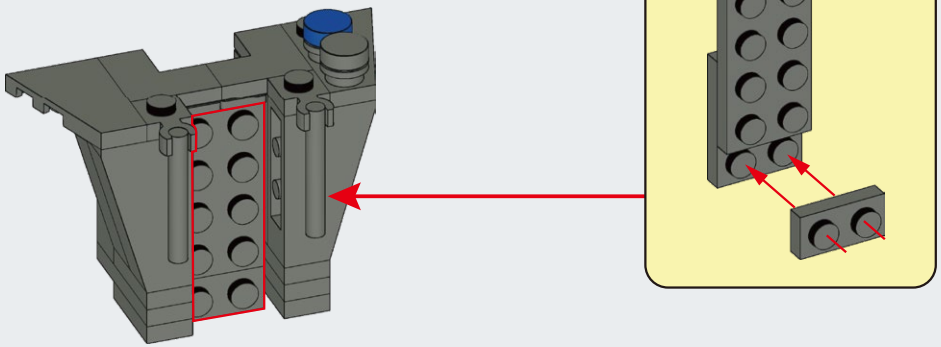

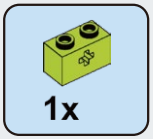

B20

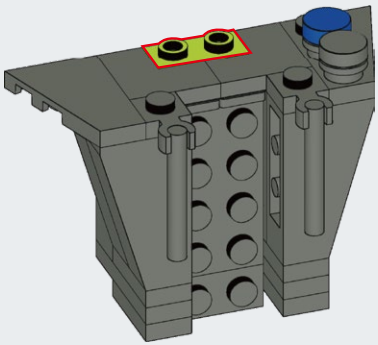

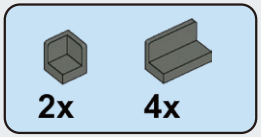

B21

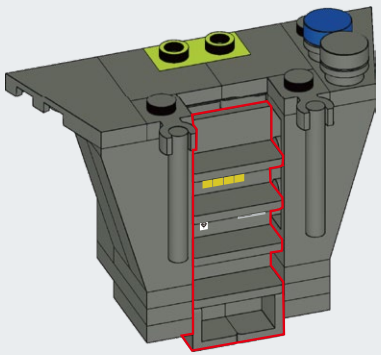

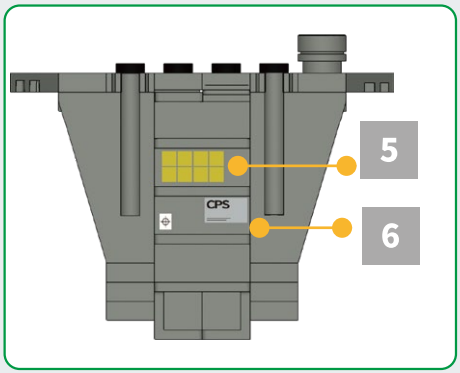

B22

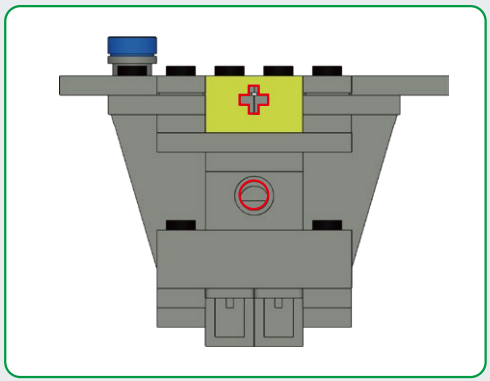

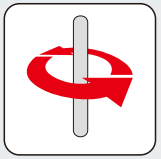

B9

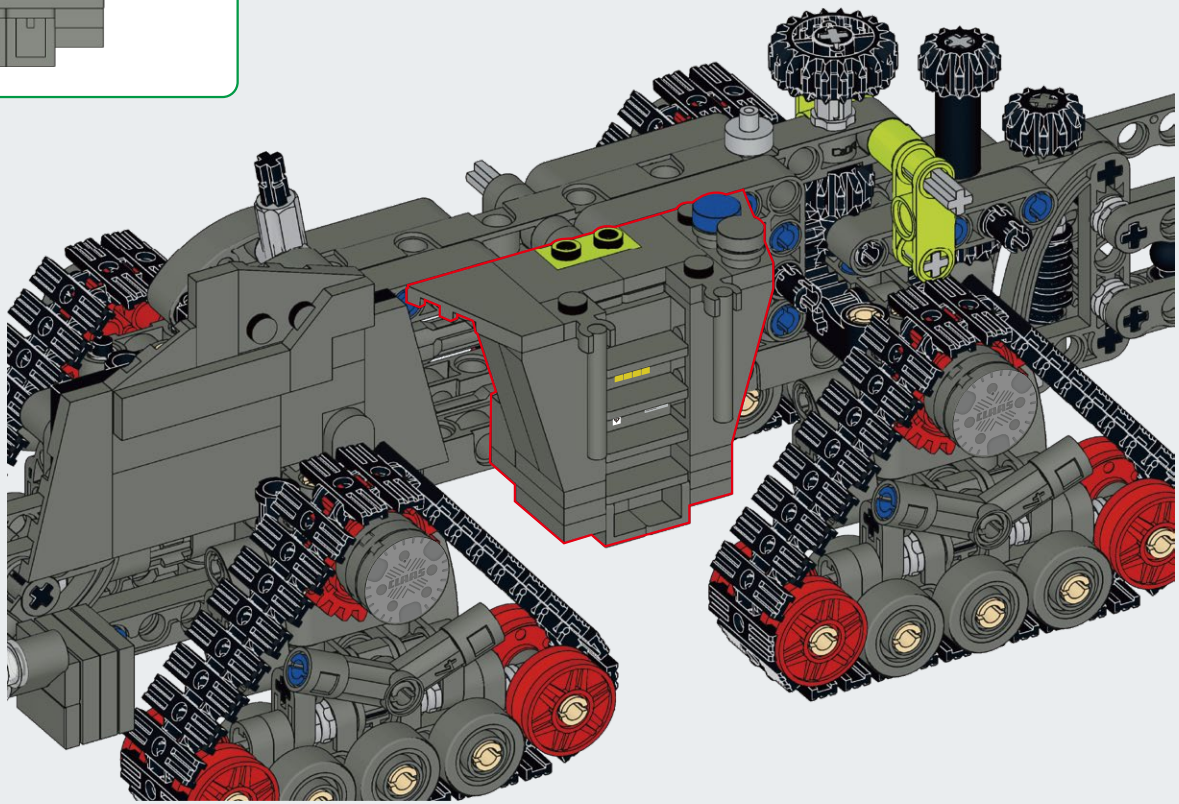

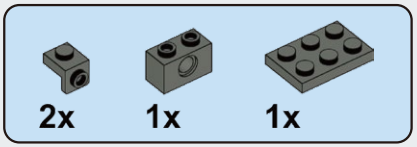

B23

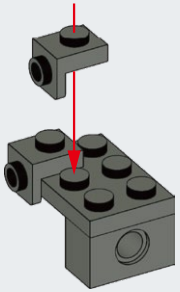

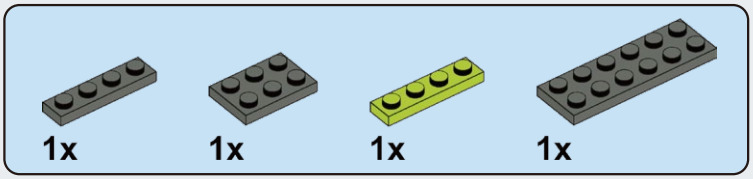

B24

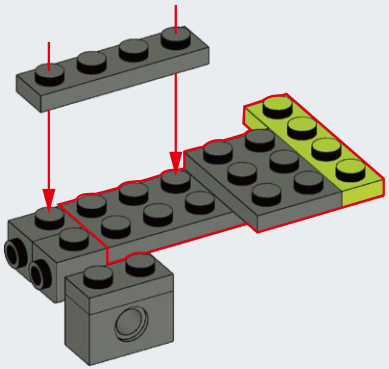

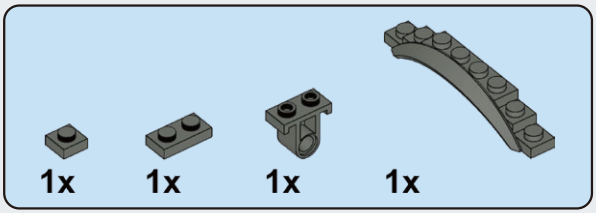

B25

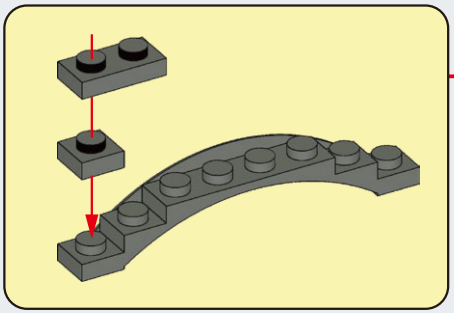

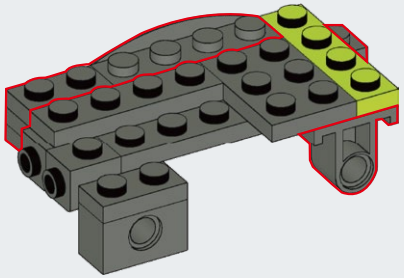

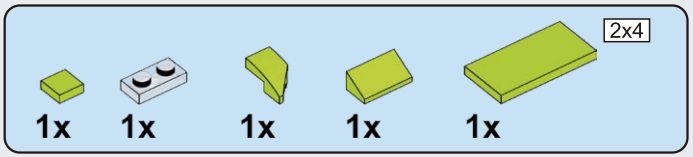

B26

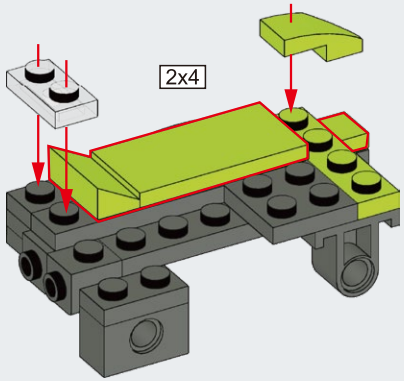

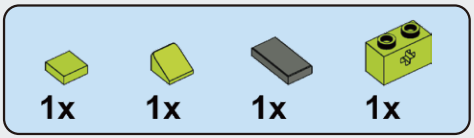

B27

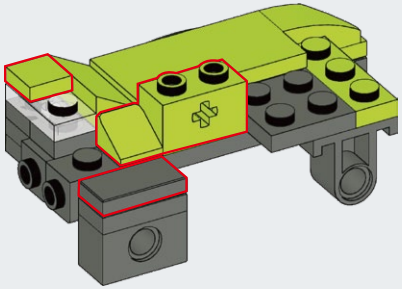

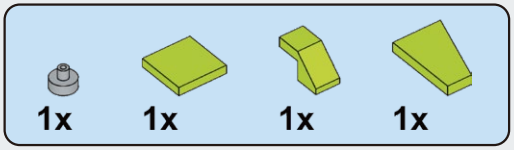

B28

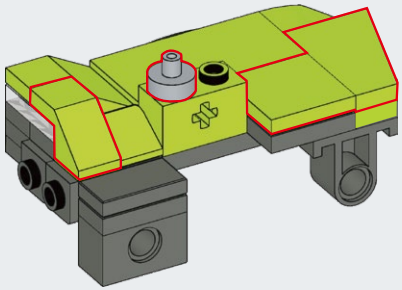

B29

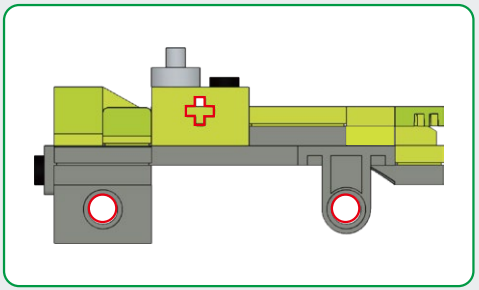

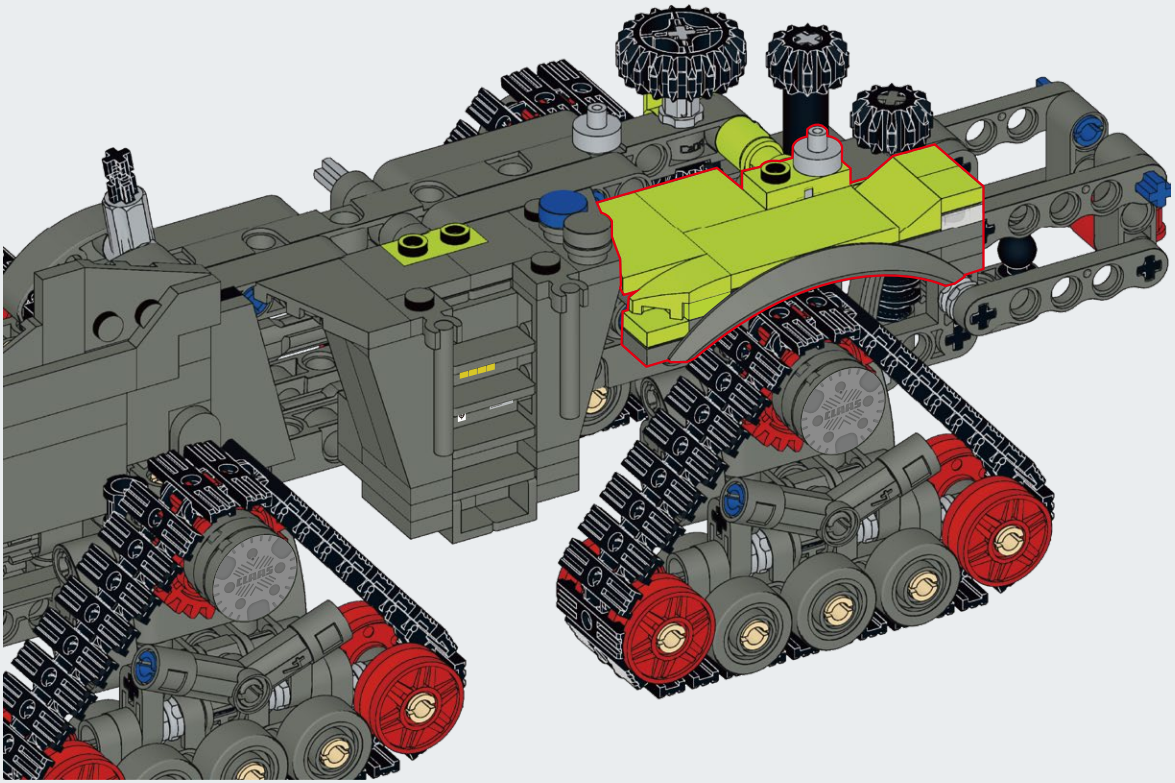

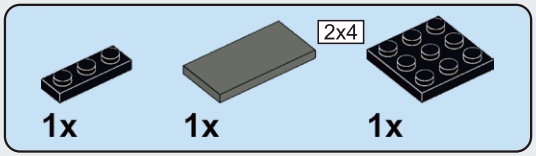

B30

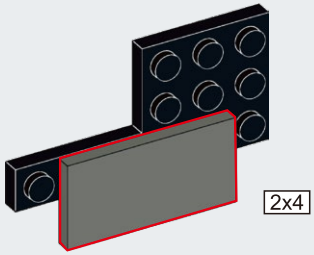

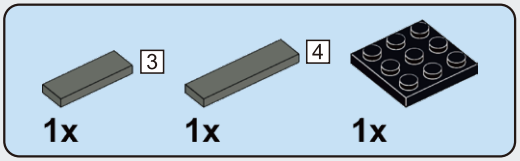

B31

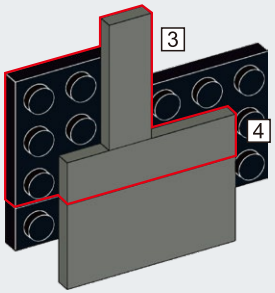

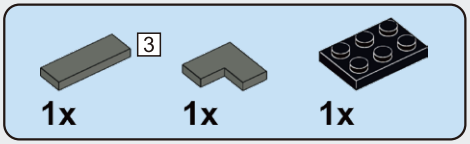

B32

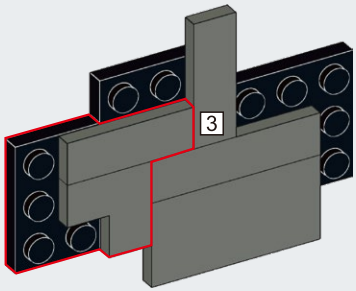

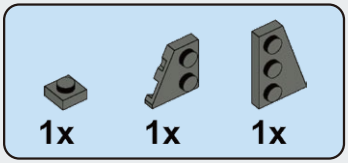

B33

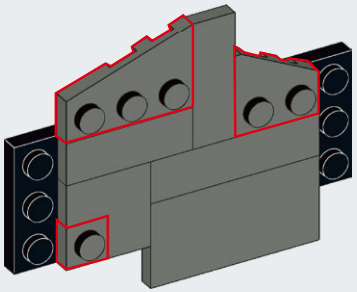

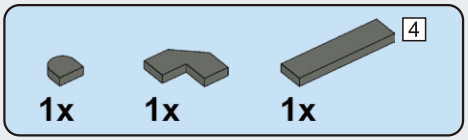

B34

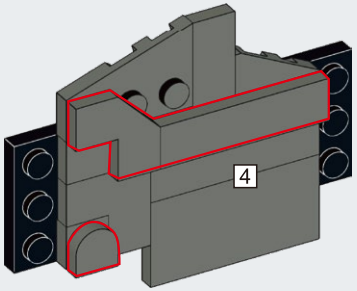

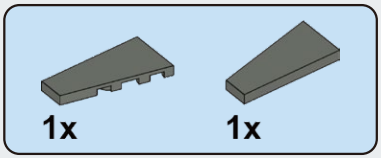

B35

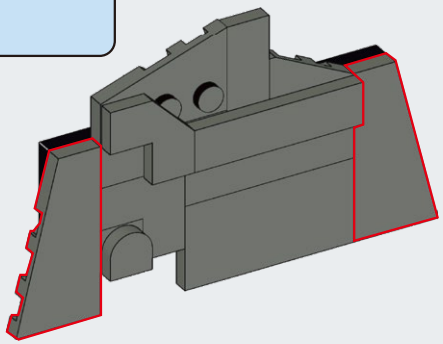

B36

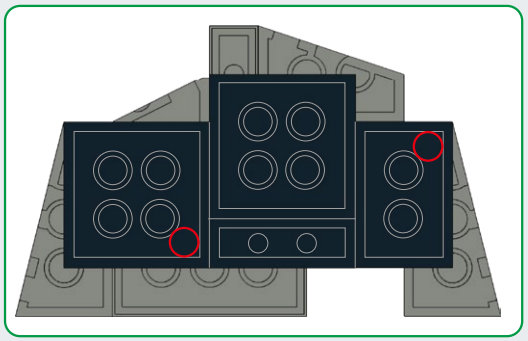

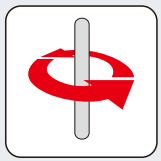

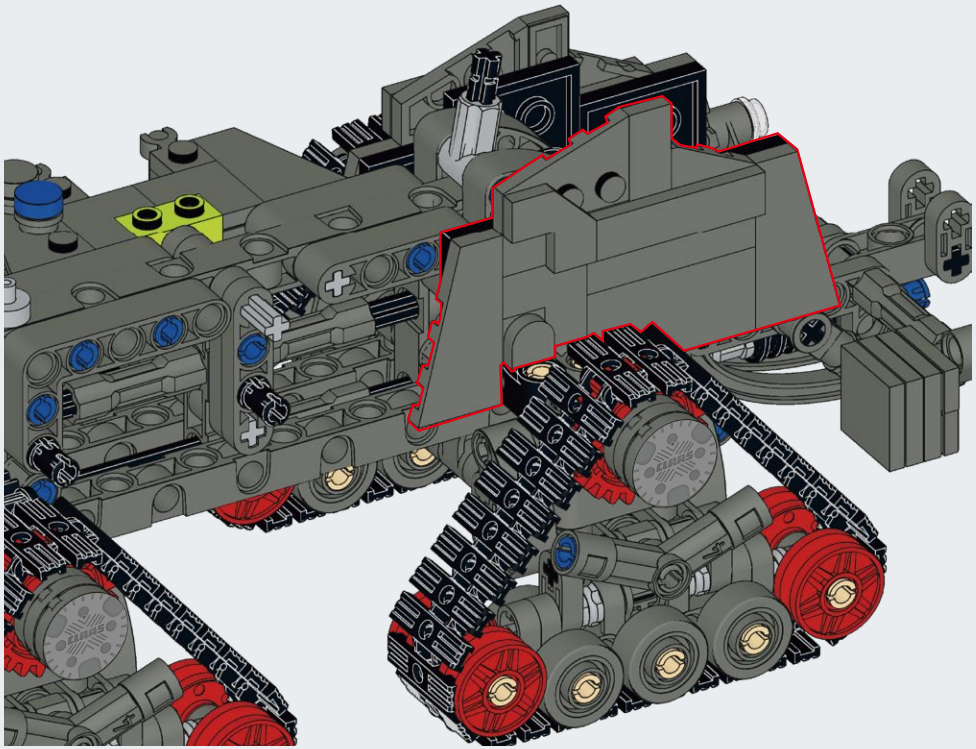

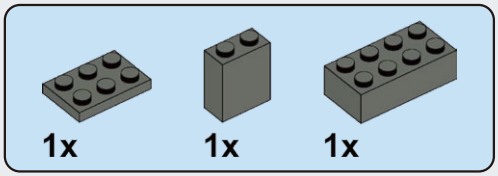

B37

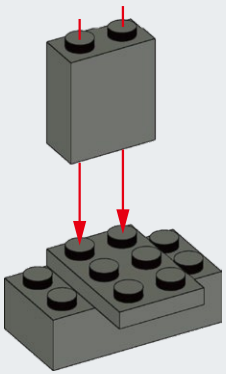

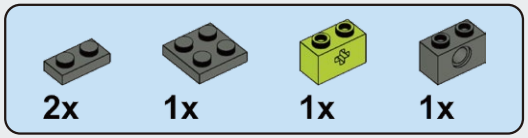

B38

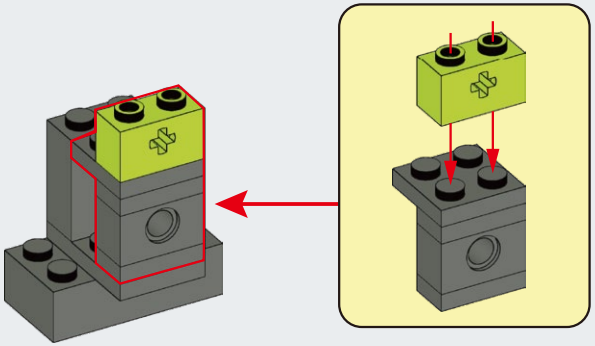

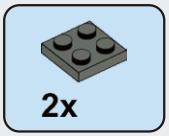

B39

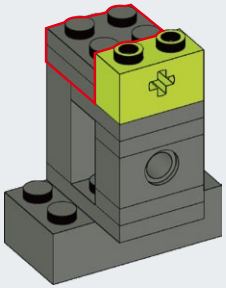

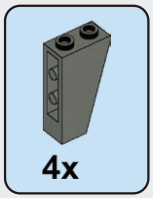

B40

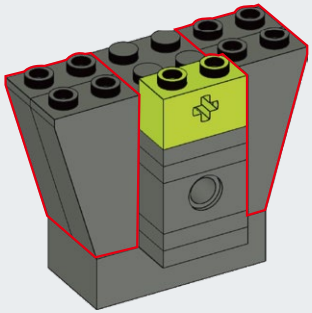

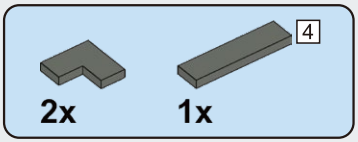

B41

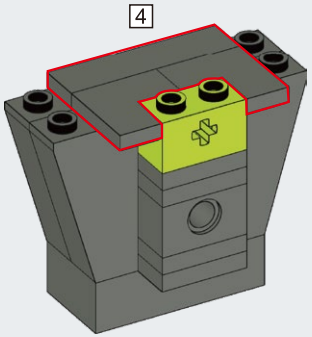

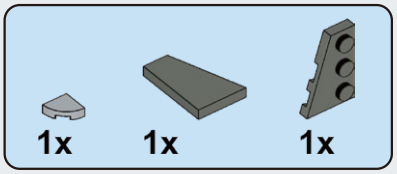

B42

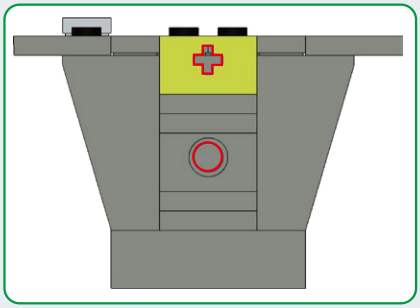

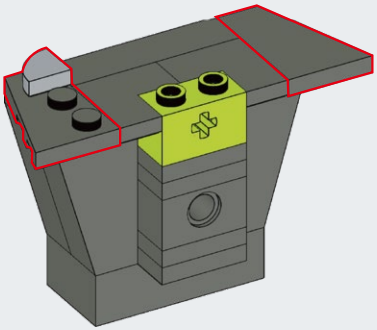

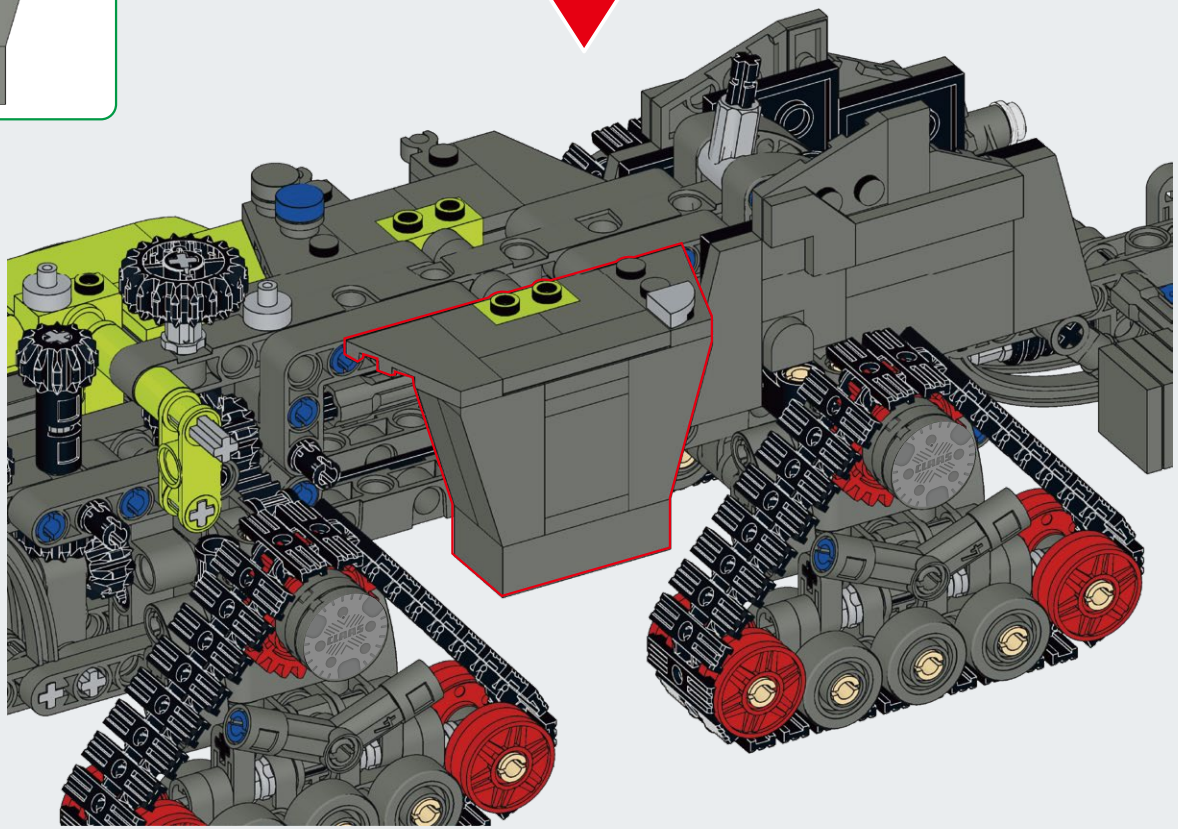

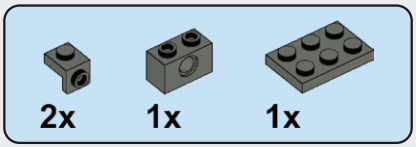

B43

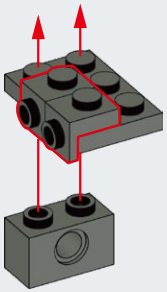

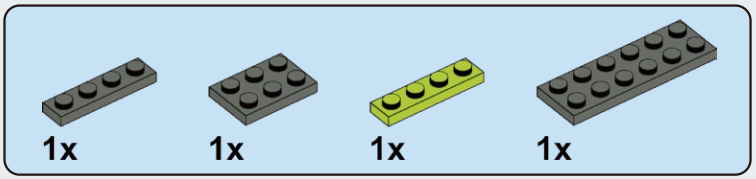

B44

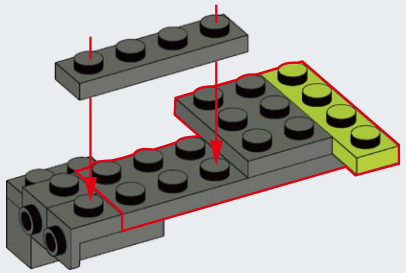

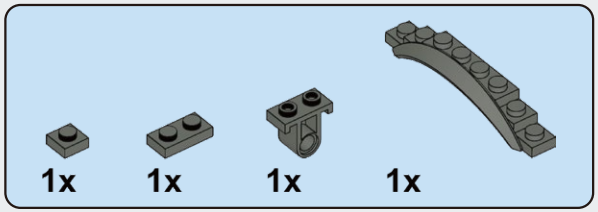

B45

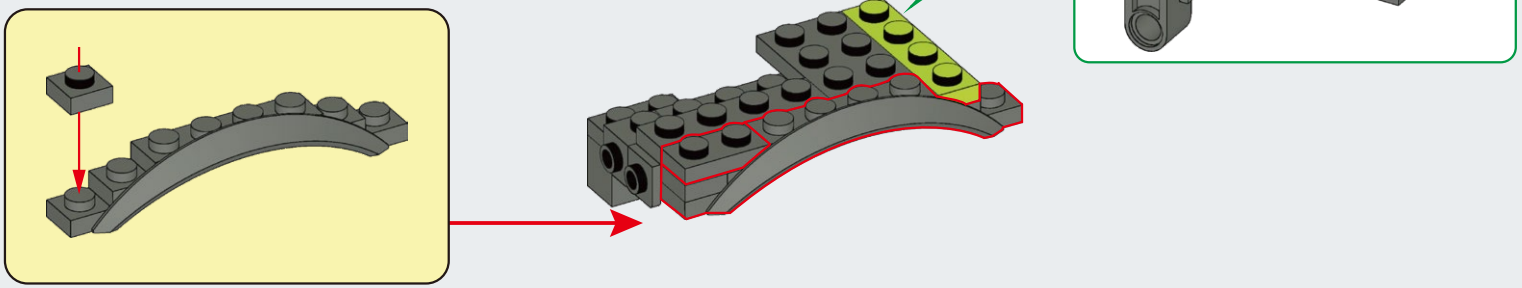

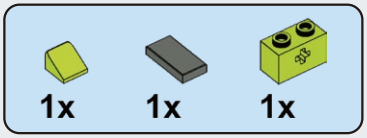

B46

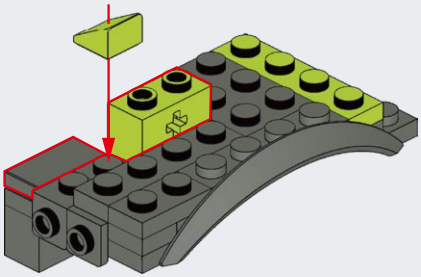

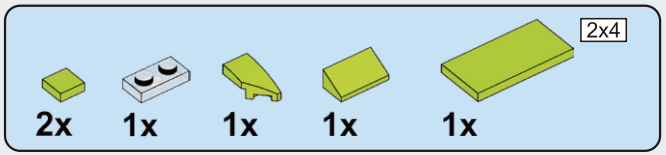

B47

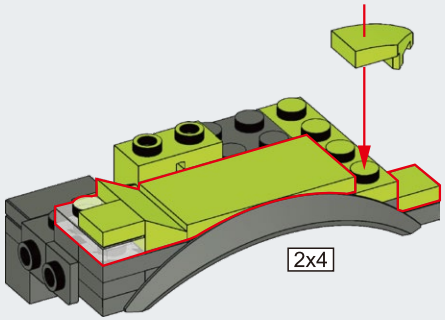

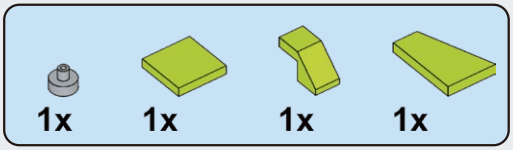

B48

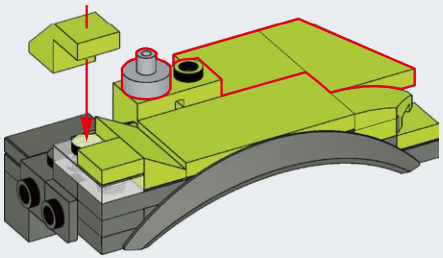

B49

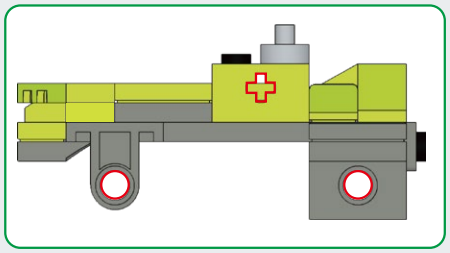

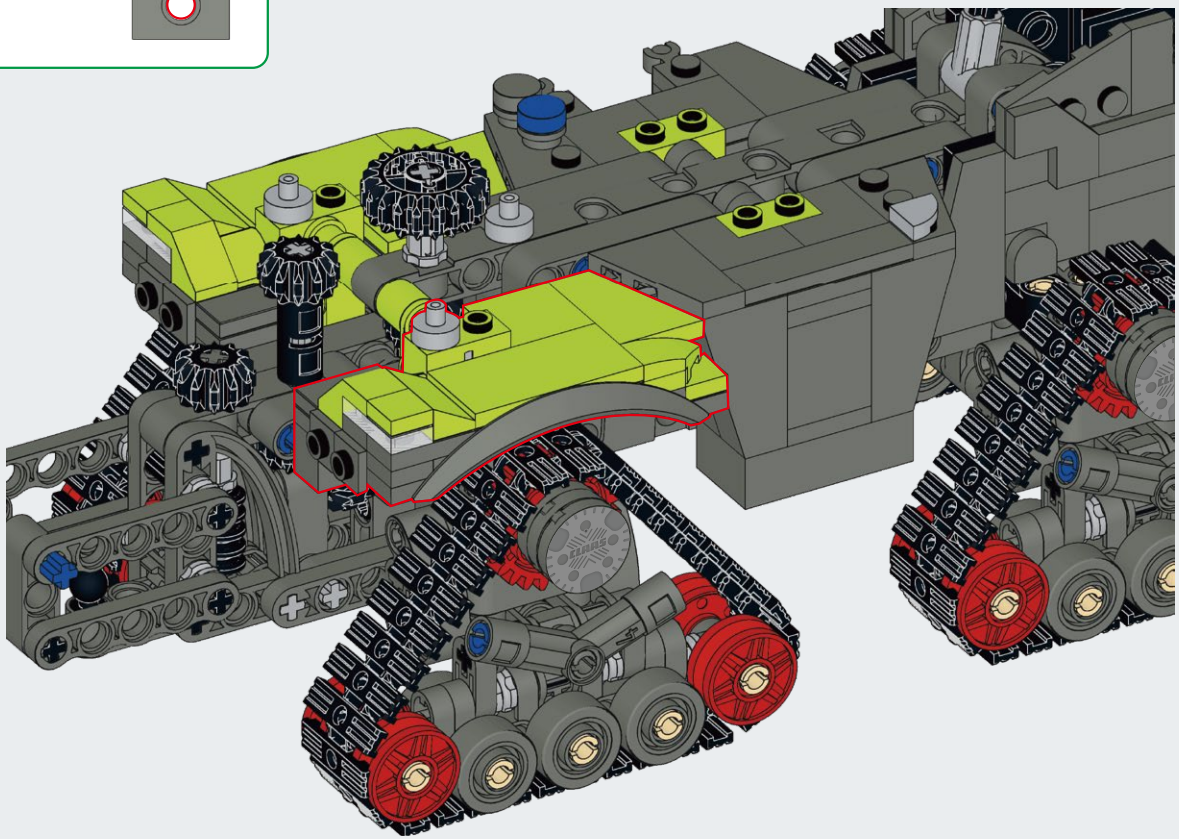

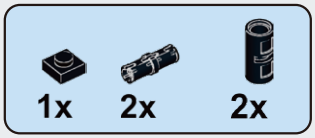

B50

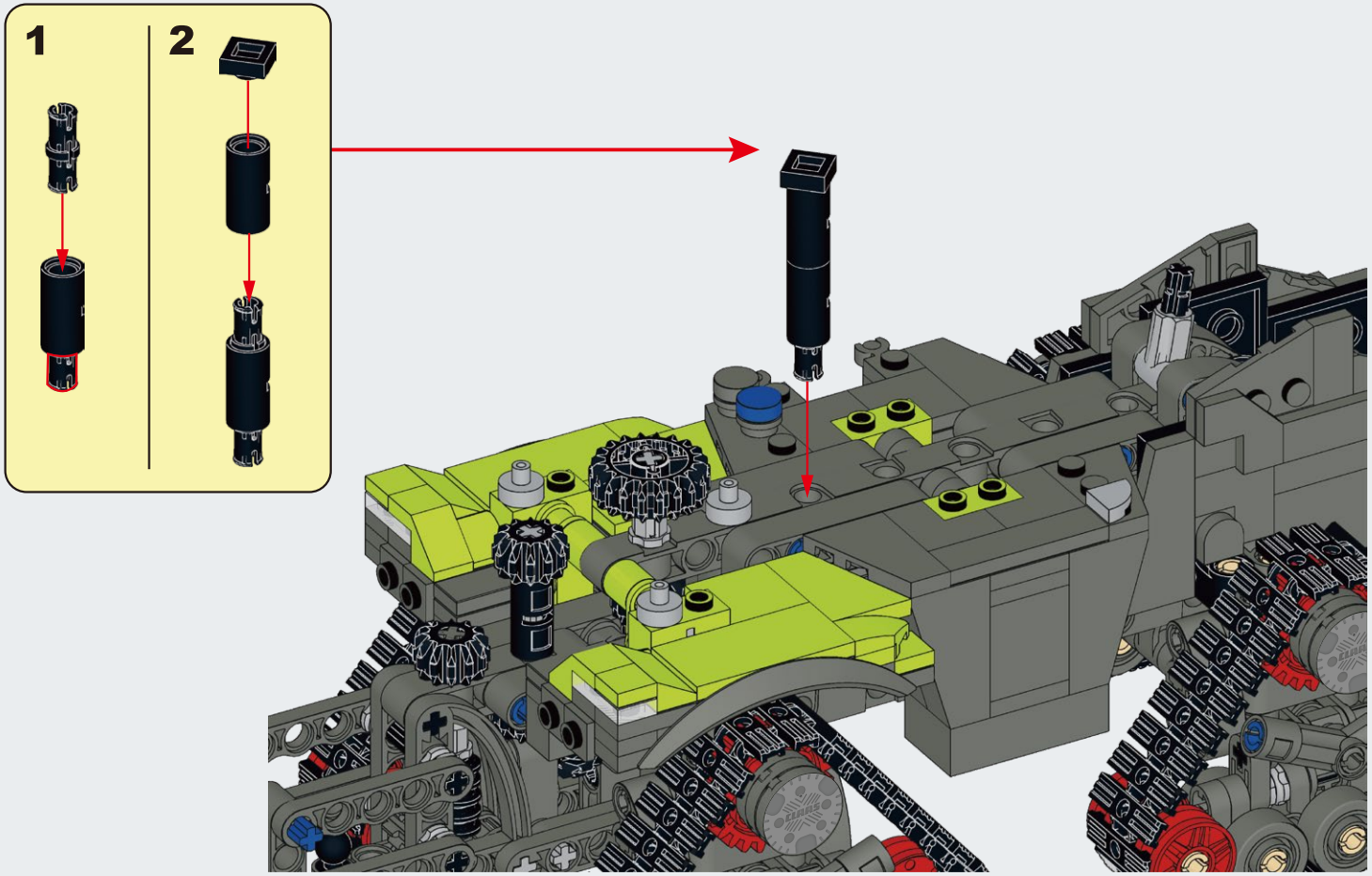

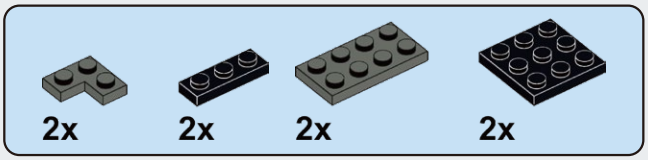

B51

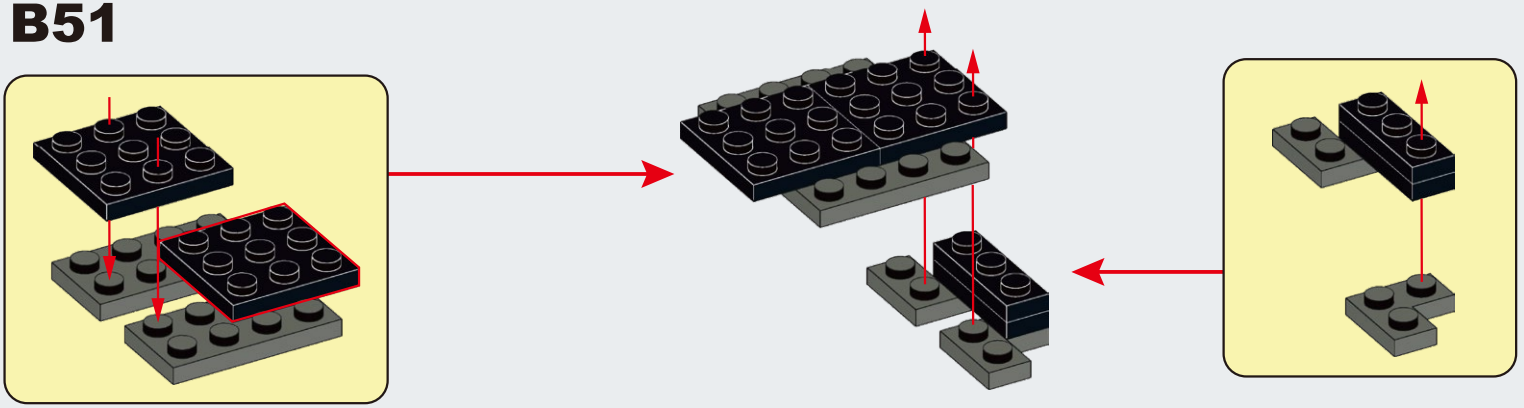

B52

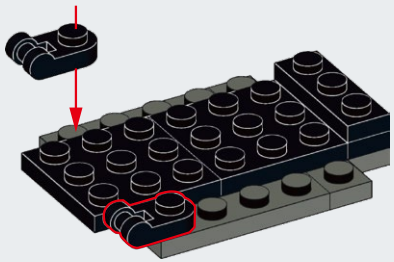

B53

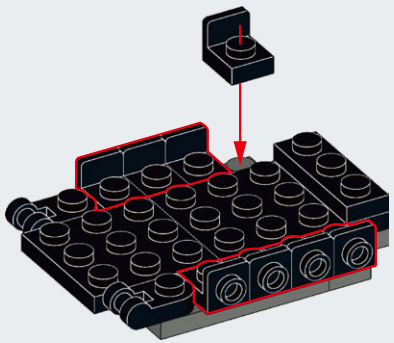

1x
1x
1x
2x
2x

B54

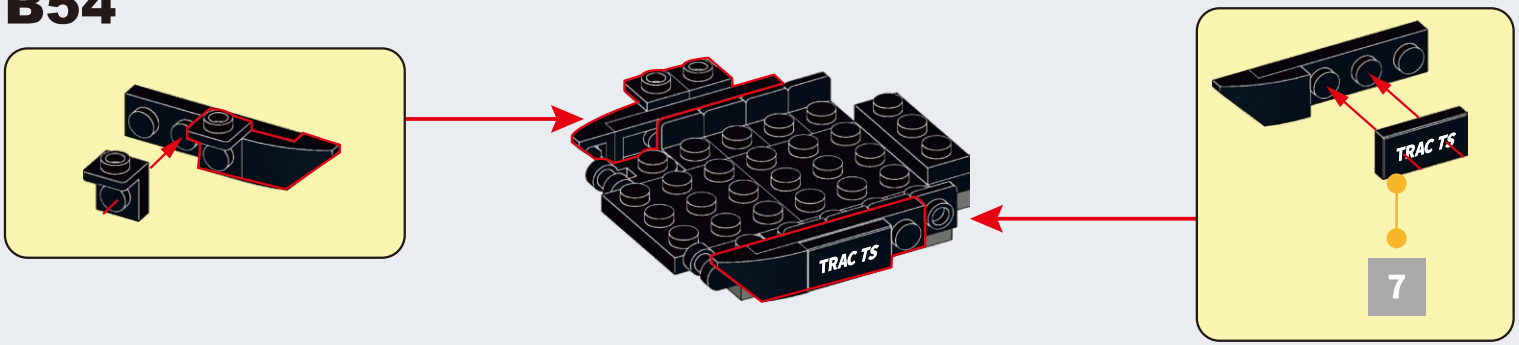
TRAC TS
TRAC TS
7

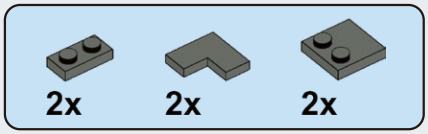
2x
2x
2x

B55

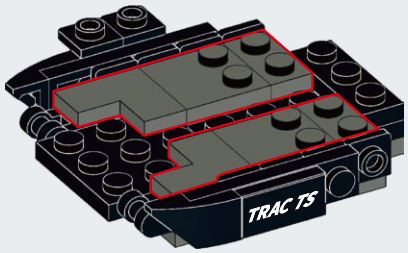
TRAC TS

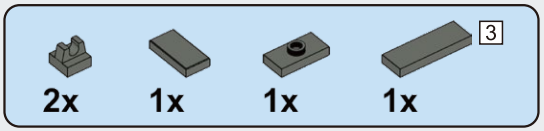
3
2x
1x
1x
1x

B56

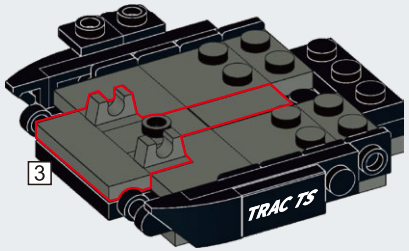
3
TRAC TS

2x

B57

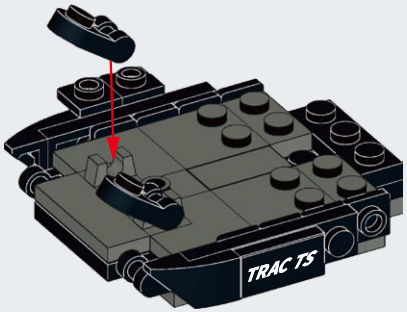

1x 2x 1x 1x 1x

B58

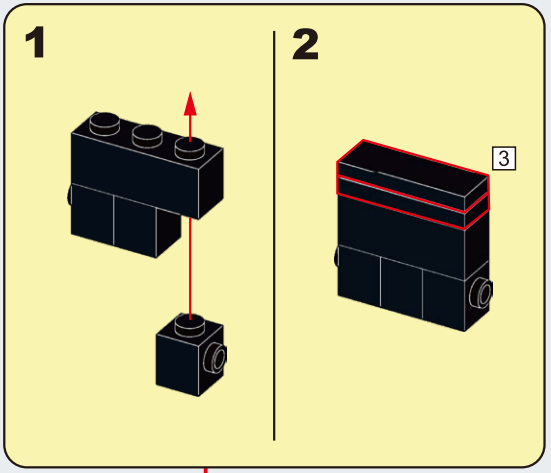

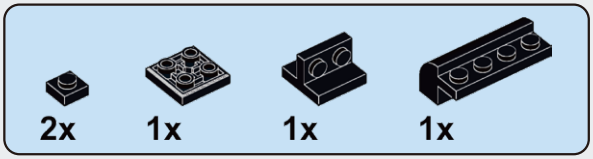

B59

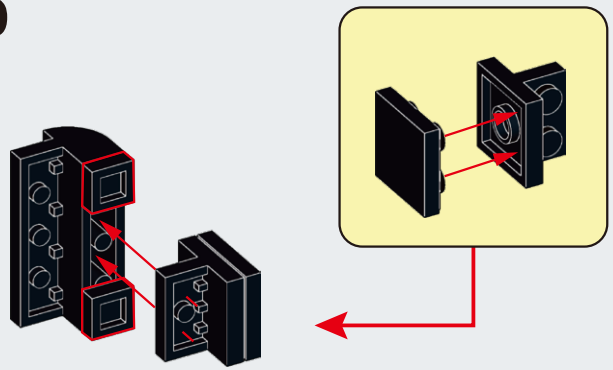

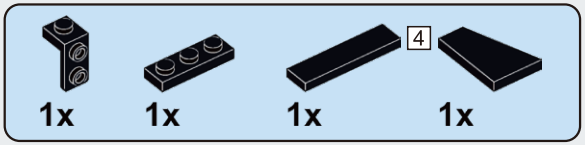

B60

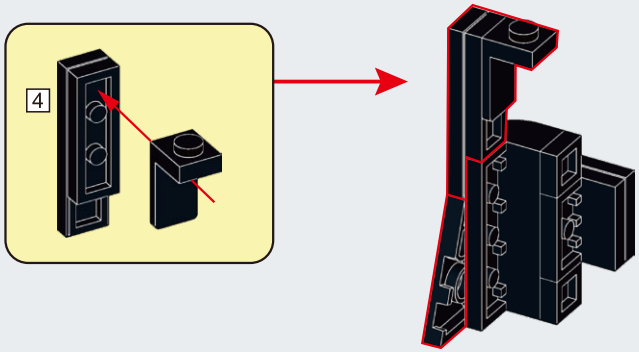

B61

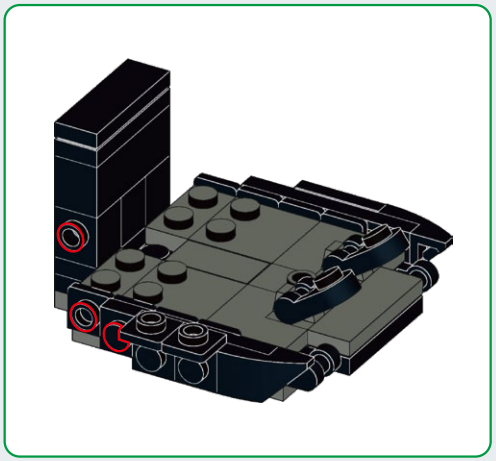

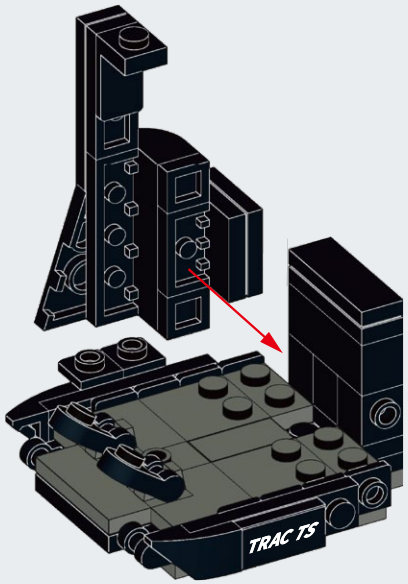

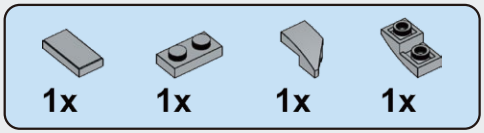

B62

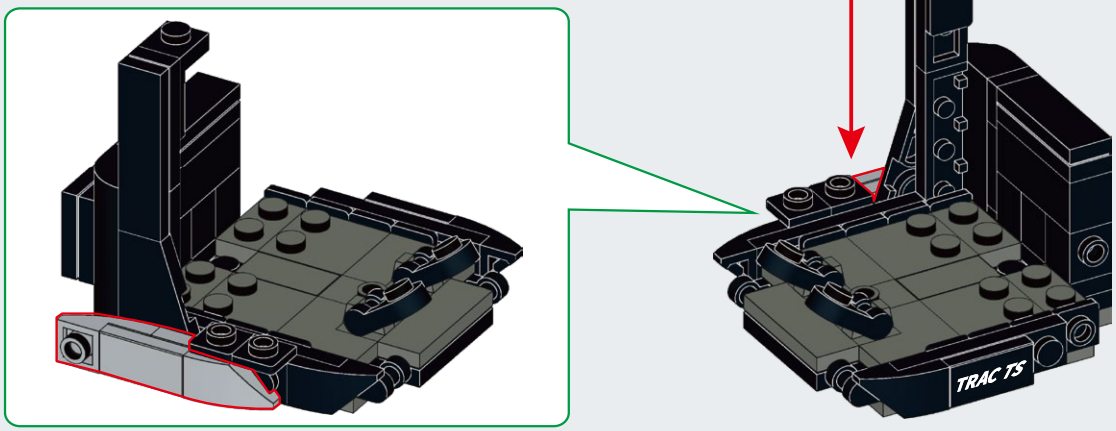

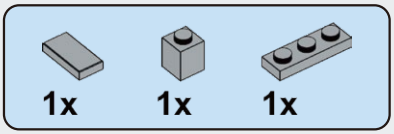

B63

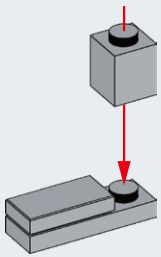

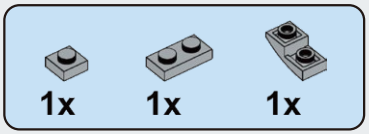

B64

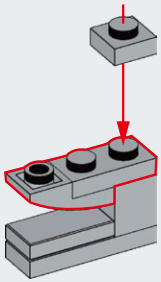

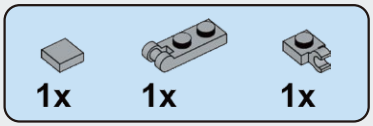

B65

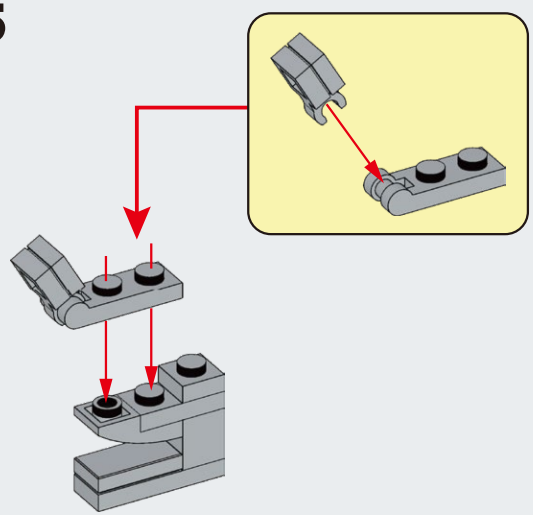

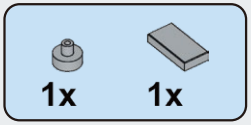

B66

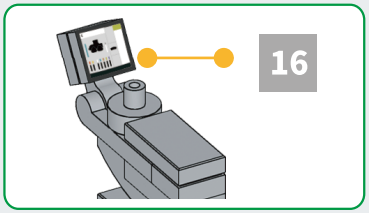

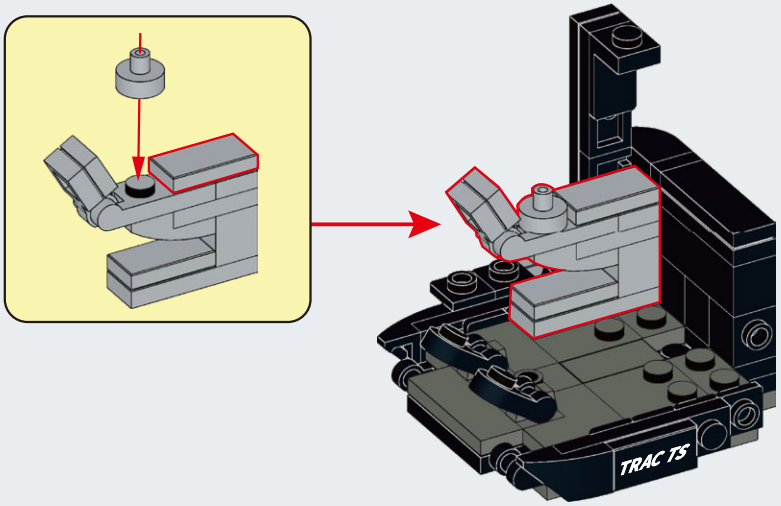

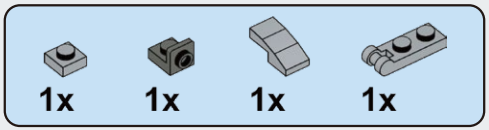

B67

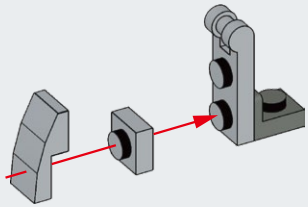

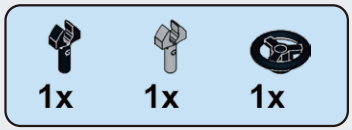

B68

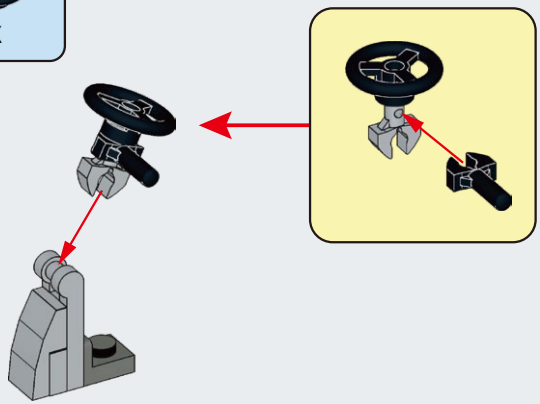

B69

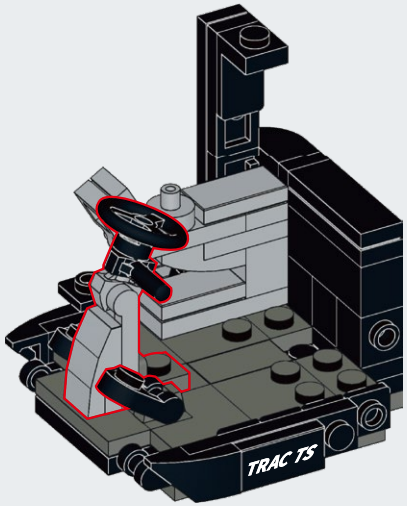

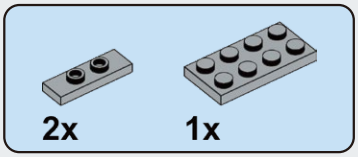

B70

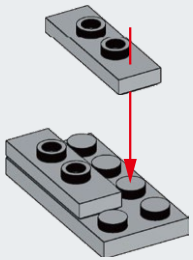

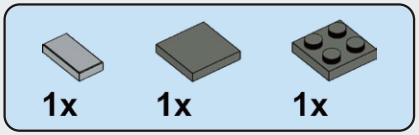

B71

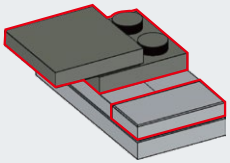

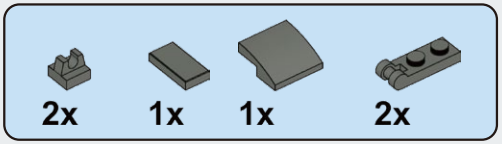

B72

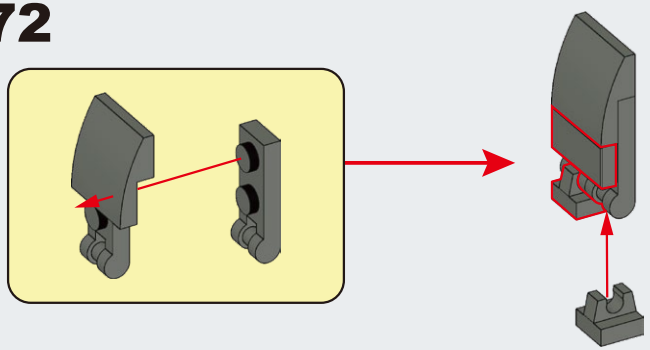

B73

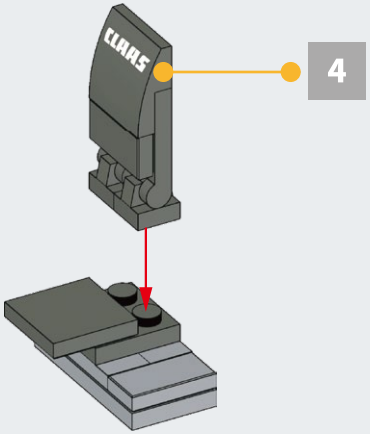

B74

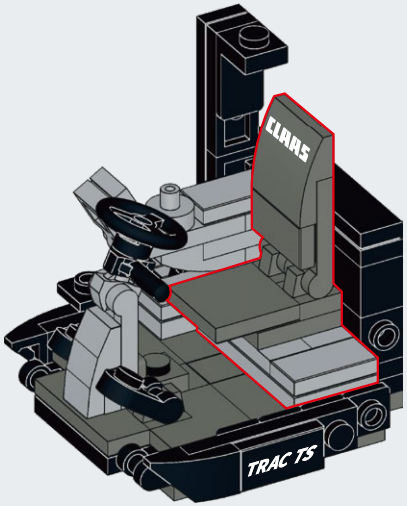

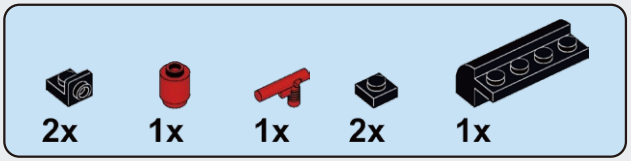

B75

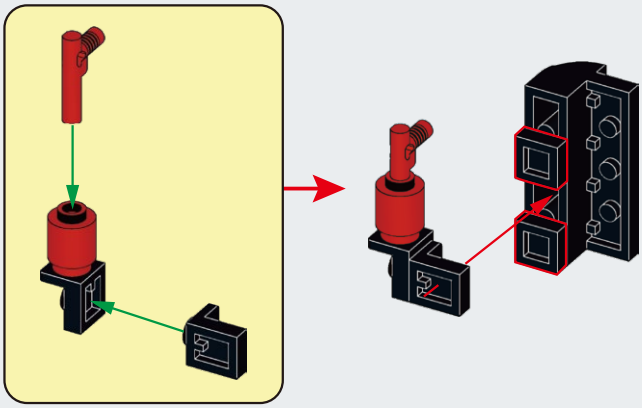

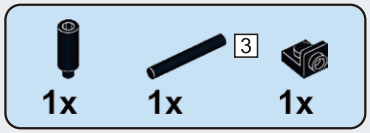

B76

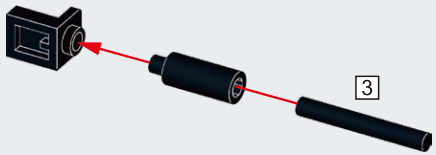

B77

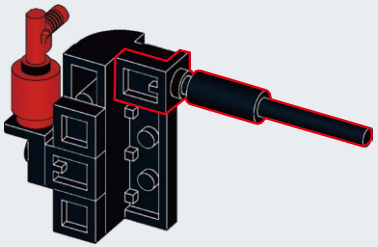

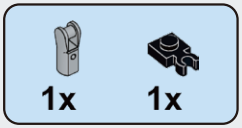

B78

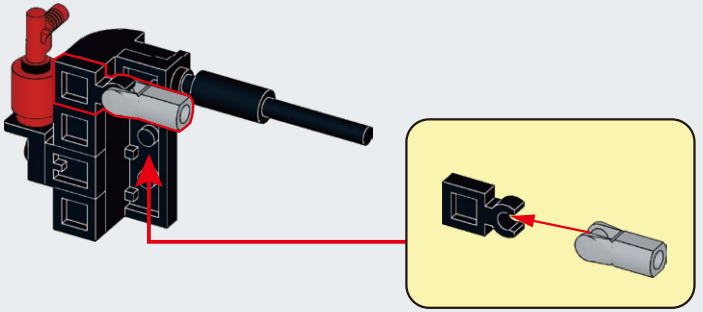

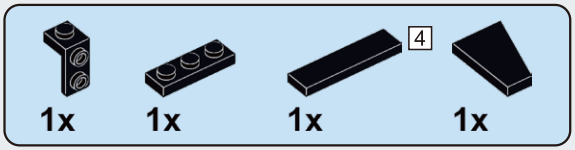

B79

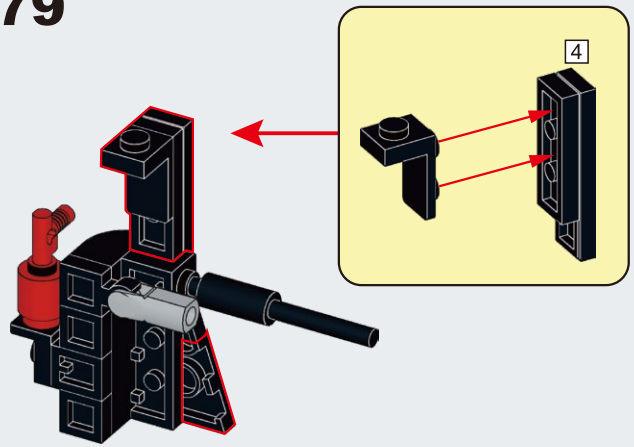

B80

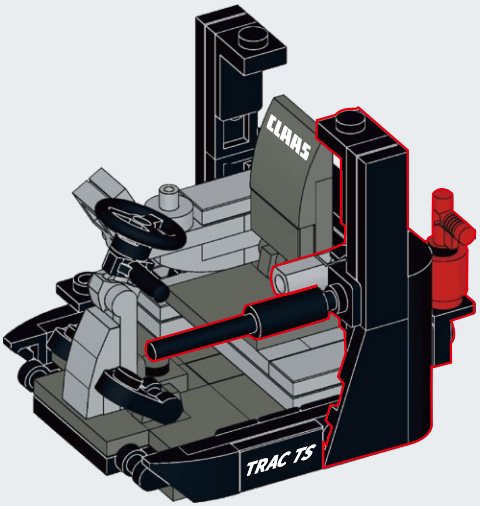

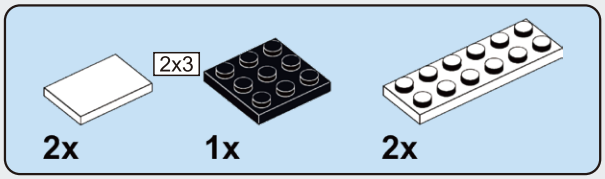

B81

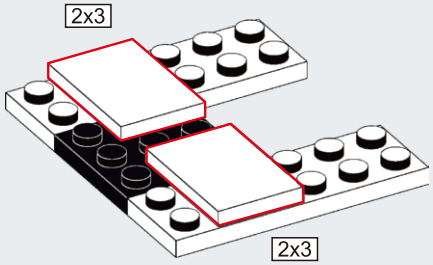

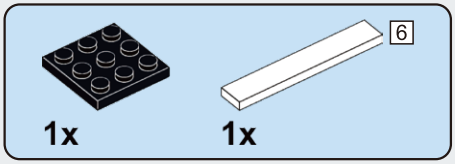

B82

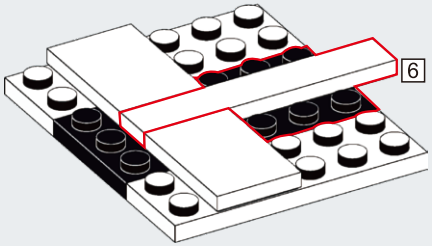

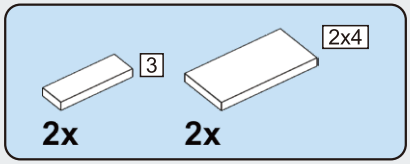

B83

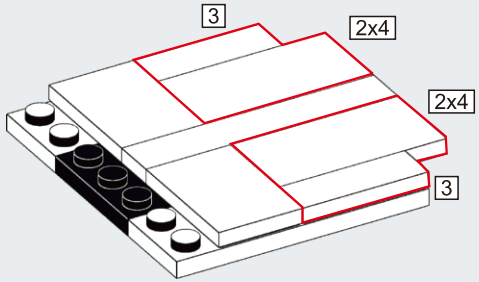

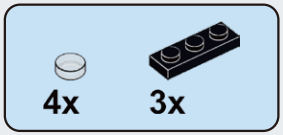

B84

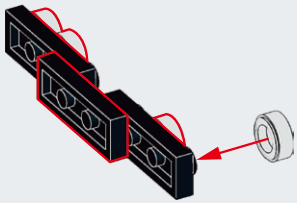

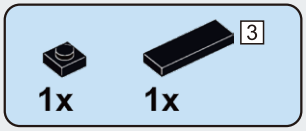

B85

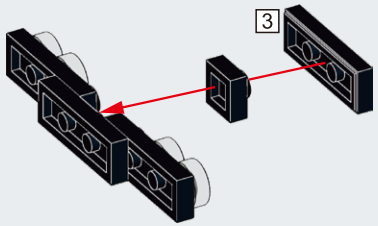

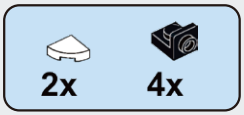

B86

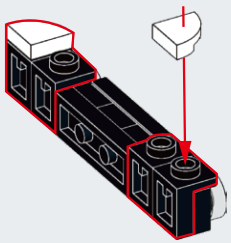

B87

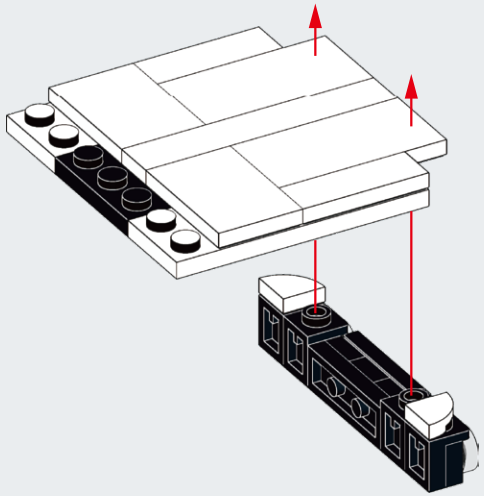

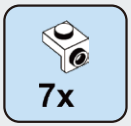

B88

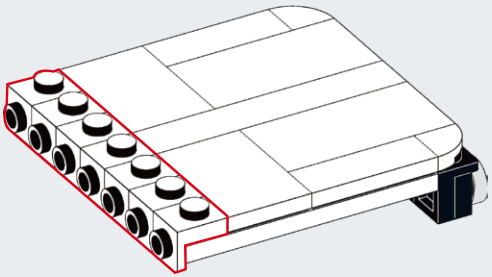

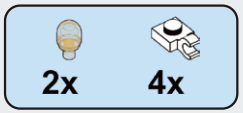

B89

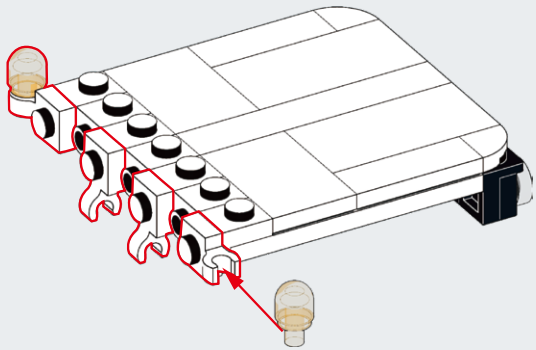

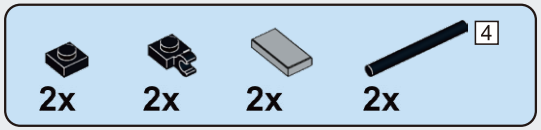

B90

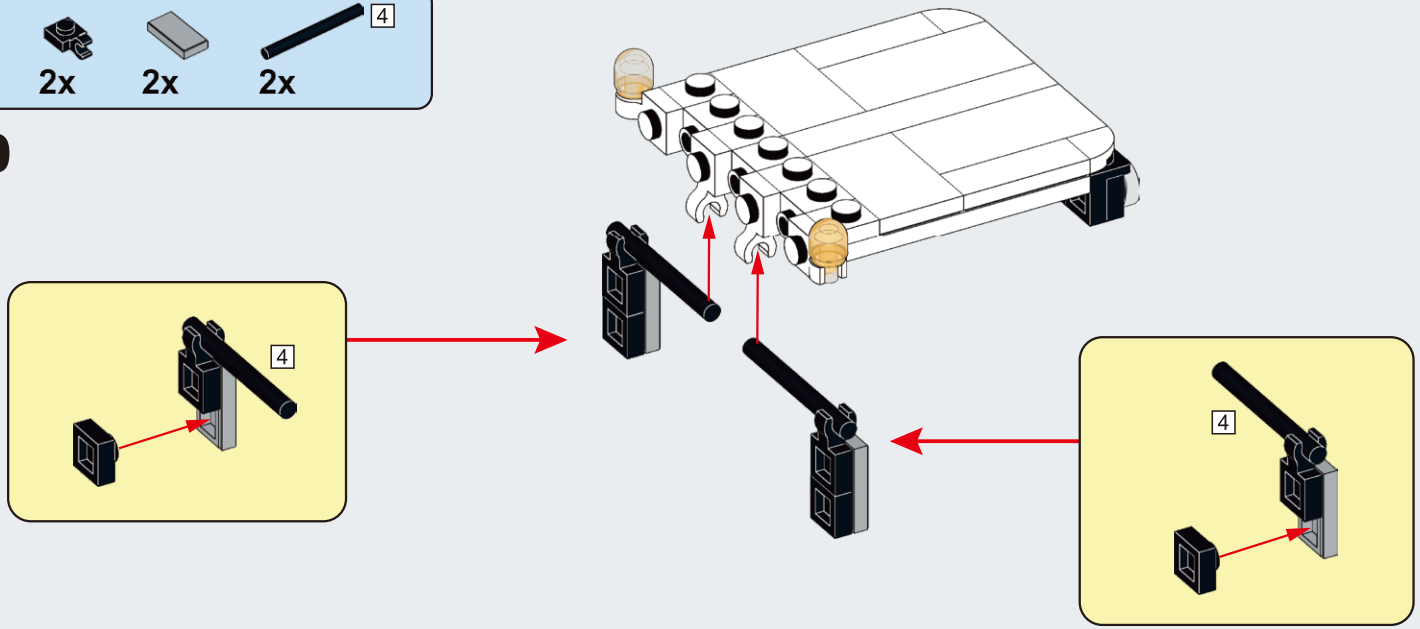

B91

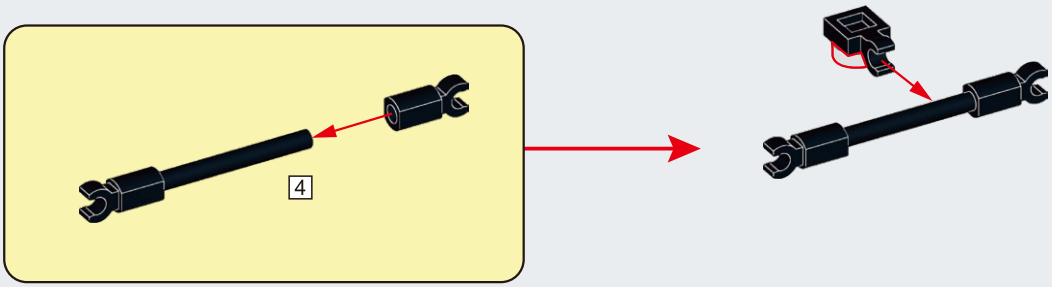

B92

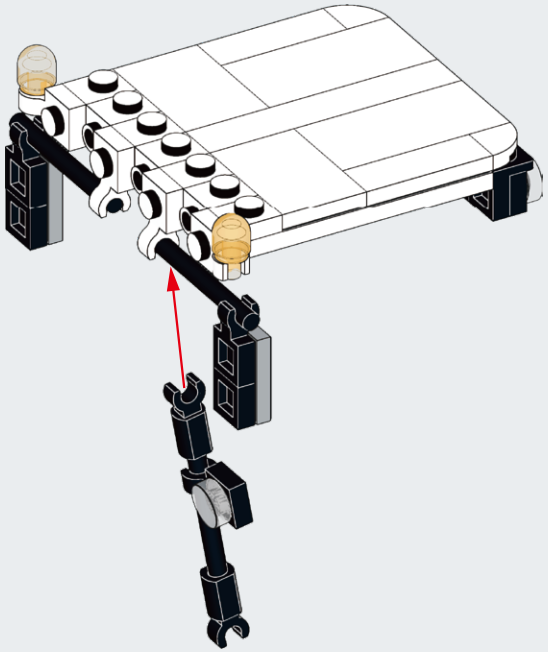

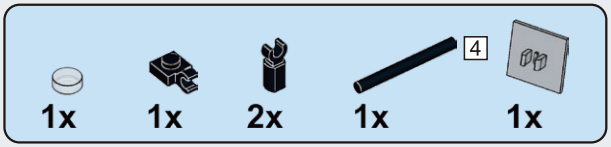

B93

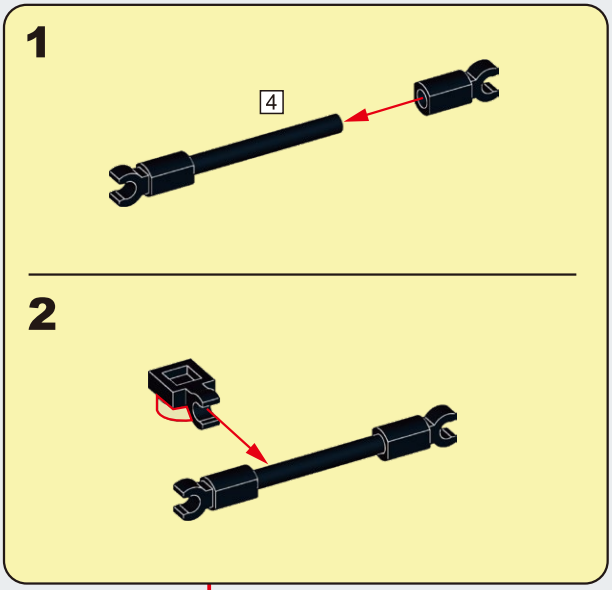

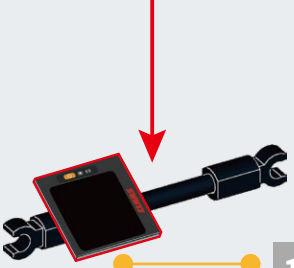

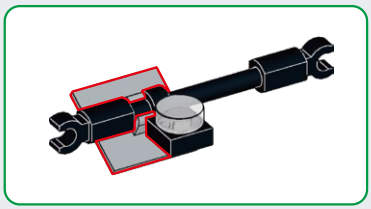

B94

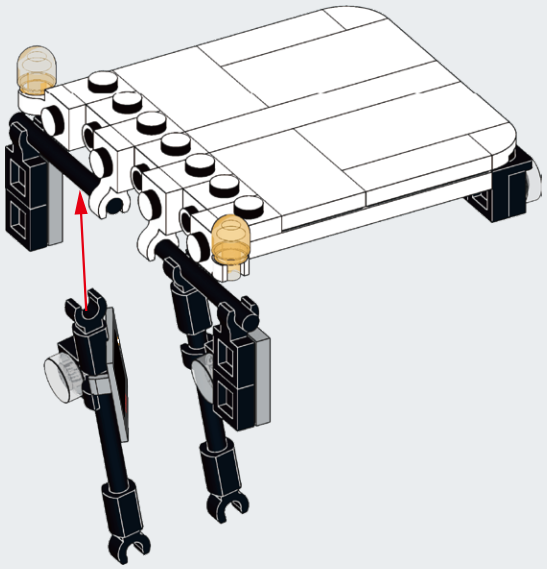

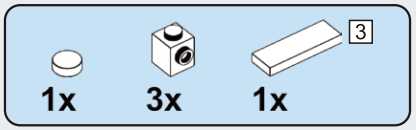

B95

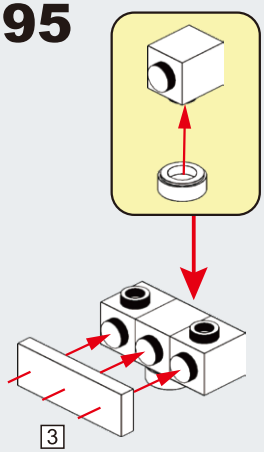

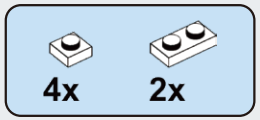

B96

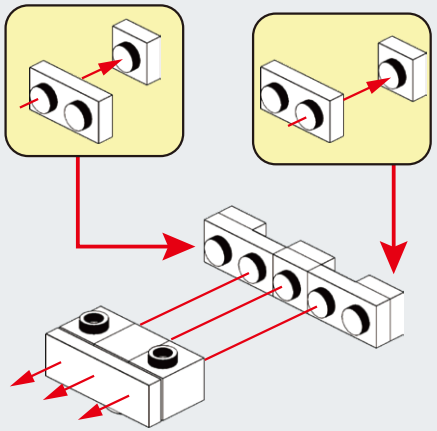

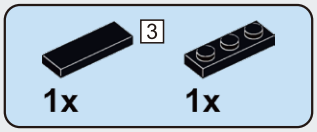

B97

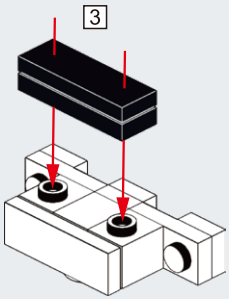

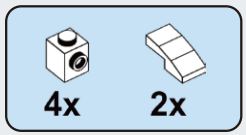

B98

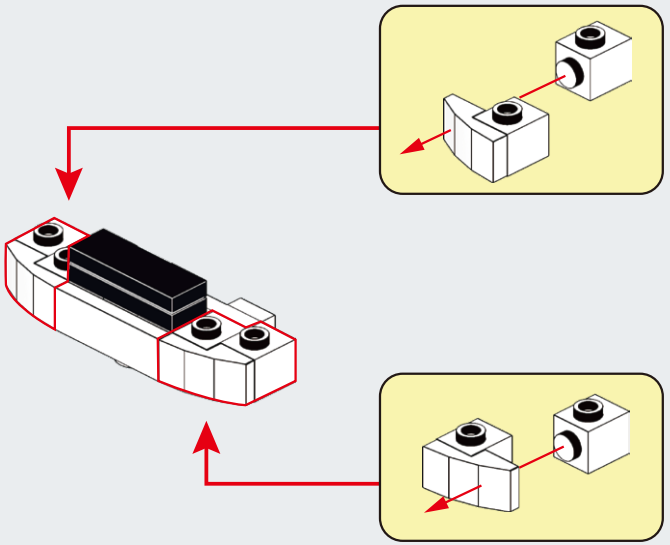

B99

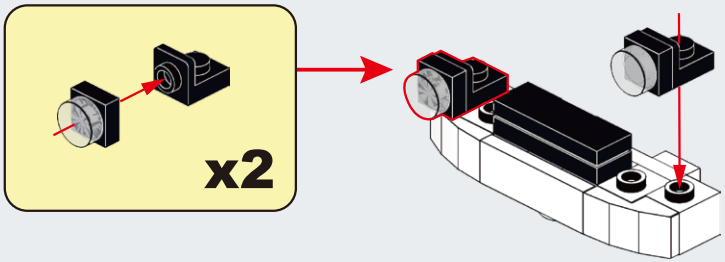

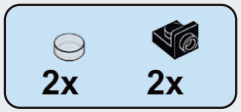

B100

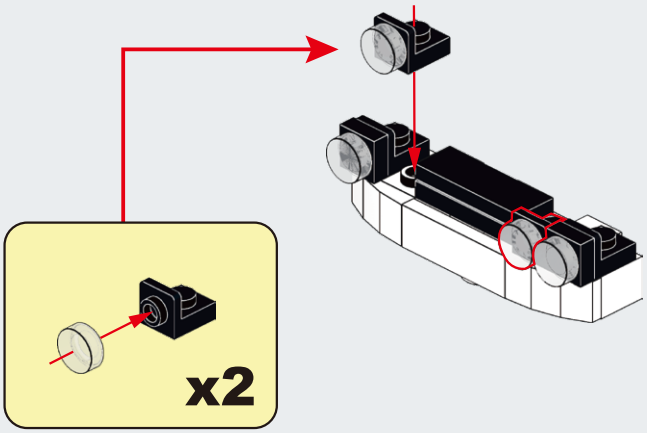

B101

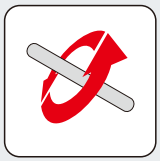

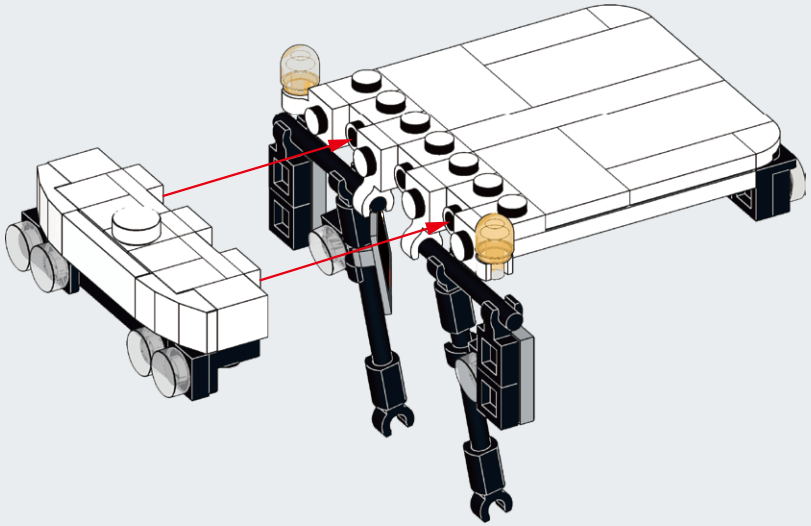

B102

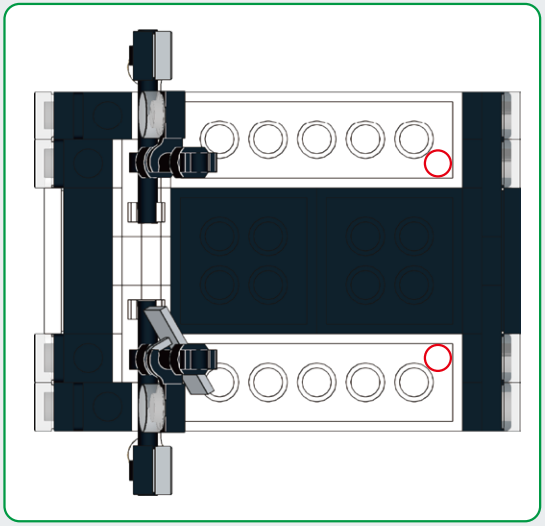

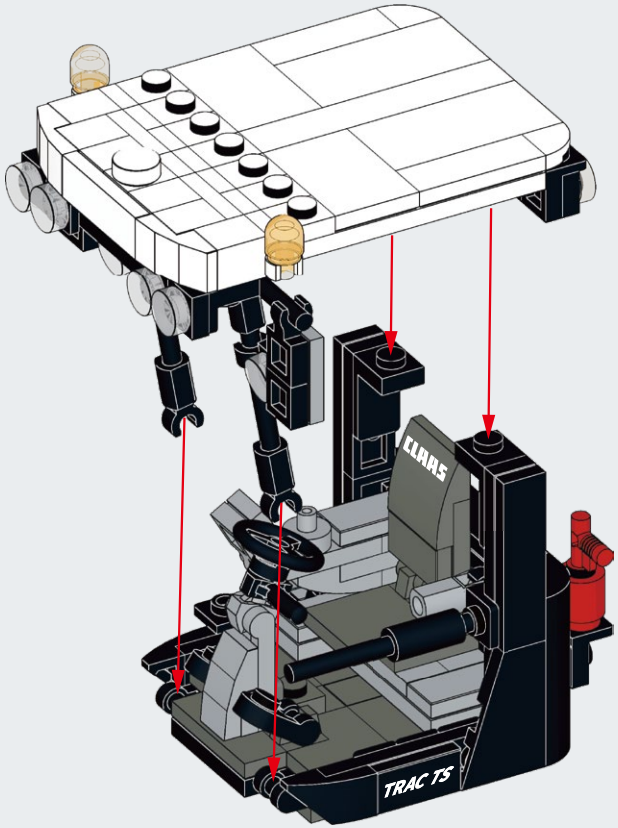

B103

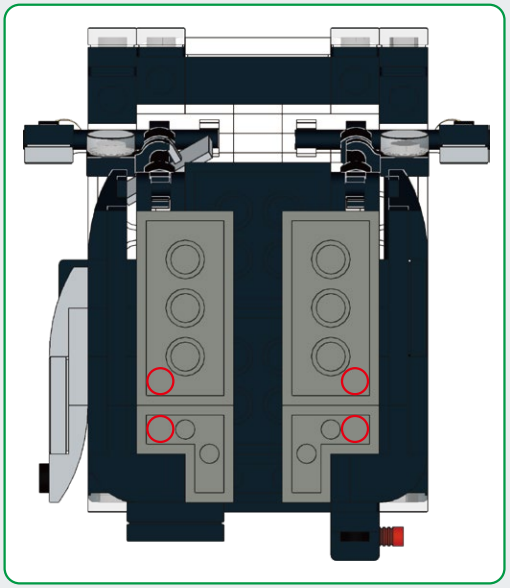

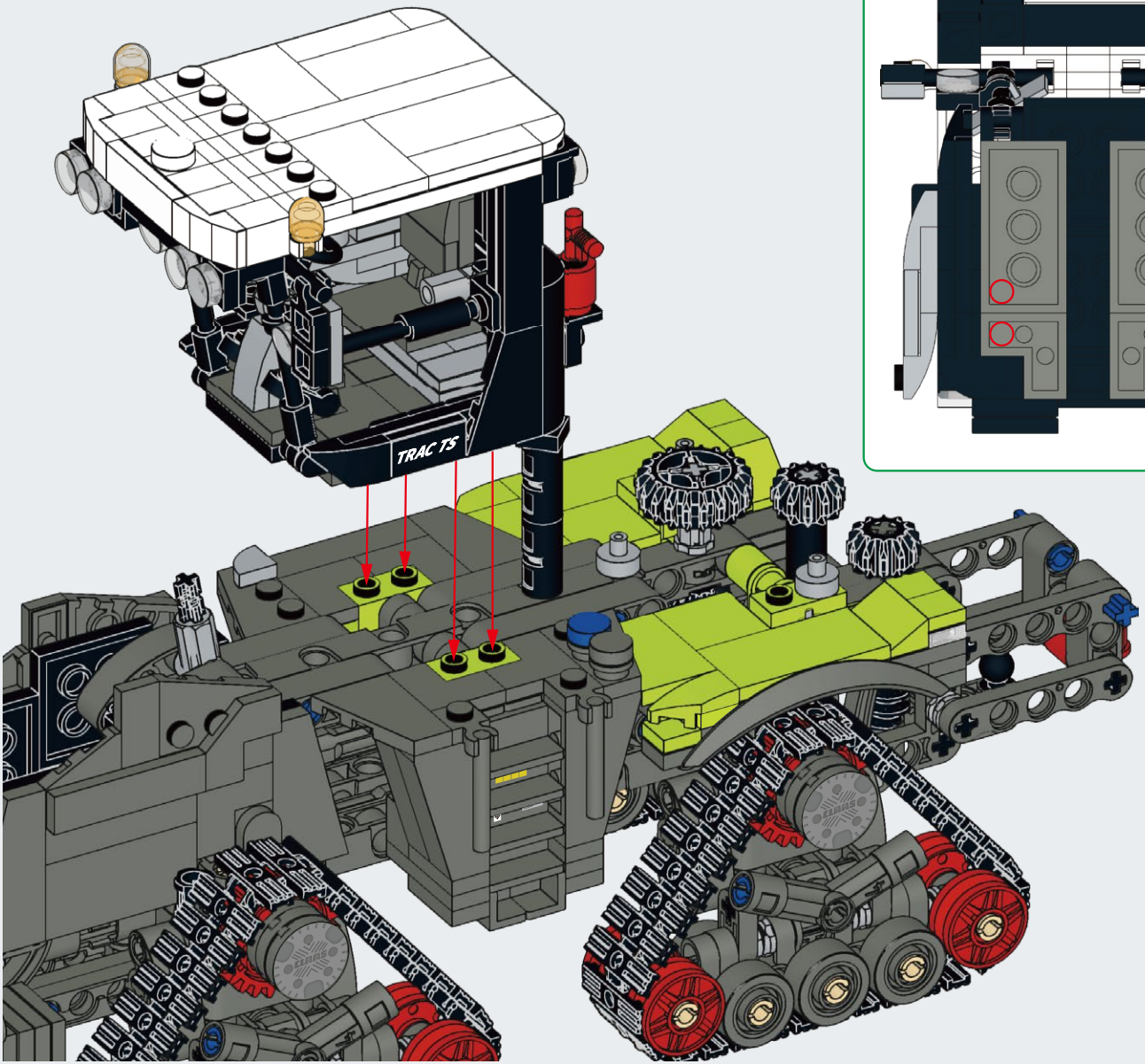

CaDA®

www.doubleeagle-group.com

C61056

C65011

C61504

403ARC650120001

CaDA®

CLAAS

MAKE YOUR BRICKS MOVE

XERION 5000 TRAC TS

C65012 I 1:32

1

Bricksley

Czerwonka Kowol

Bricksley